VDL Weweler

Maintenance & Installation Manual

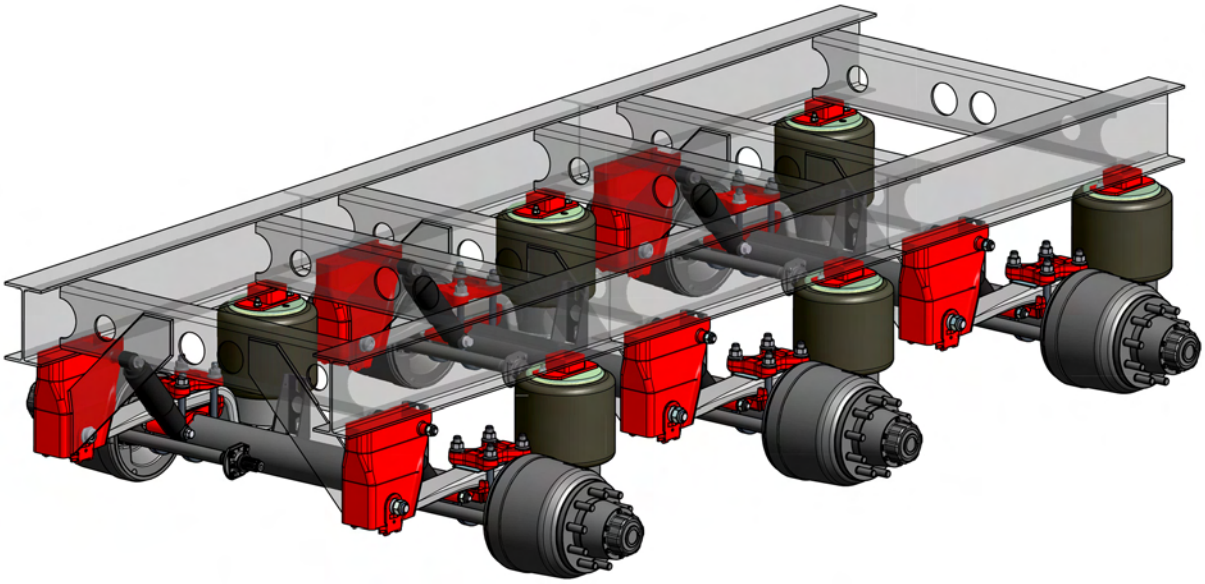

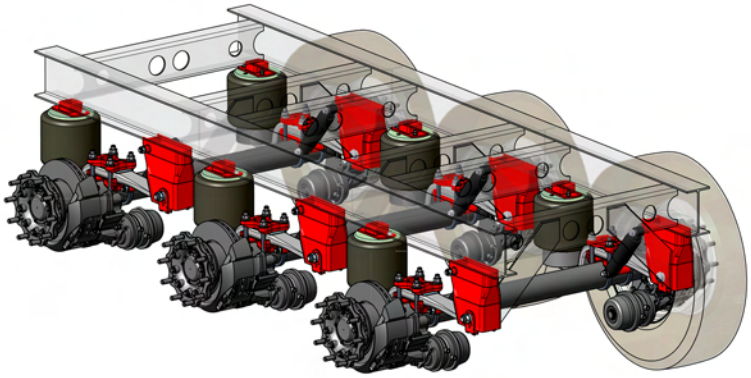

Version 1.2
14-07-2010
VDL Weweler b.v.

CONTENTS

	Page
1. Introduction	1
2. Maintenance work	2
- Overview	
- Air springs	
- Shock absorbers	
- U-Bolts	
- Pivot Bolts	
- Air spring supports	
- Axle lifts	
3. General information	5
4. Air suspension systems installation instructions & guidelines	6
- General instructions	
- System Assembly before mounting to the chassis	9
- Chassis welding preparation before mounting Suspension System	12
APPENDIX A : IM-052	16
APPENDIX B : IM-053-DOC	17
APPENDIX C : WM-A-DOC	18
APPENDIX D : WM-C-DOC	19

- THIS DOCUMENT IS SUBJECT TO CHANGE (WITHOUT NOTICE).
- NO RIGHTS CAN BE CLAIMED FROM THIS DOCUMENT.
- WEWELER IS NOT RESPONSIBLE FOR ANY ERRORS, MISPRINTS OR OMISSIONS IN THIS PUBLICATION.

INTRODUCTION

The maintenance intructions in this manual covers Weweler air suspension systems.

It is essential to observe the maintenance intervals specified by the manufacturer, this will ensure continuous operational safety and roadworthiness.

If the operator of the trailer does not have the required technical equipment and/or expertise is not officially authorised to carry out intermediate inspections, contact Weweler.
(see http://www.vdlweweler.com)
They can supply detailed technical information and the correct procedure for replacing worn parts.

Ensure that when fitting replacement components, only fit Weweler genuine parts. This will avoid invalidating warranties, type approvals, local and international regulations.

Weweler air suspension systems are low maintenance systems. For this reason, all moving parts are rubber/steel Bushing; this avoids the need for lubrication during regular service intervals. The specified torque settings and high clamping forces ensure that the steel inner bushes cannot turn. The rubber part of the component accommodates the turning movement, when required.

	MAINTENANCE WORK **(FOR DETAILLED DESCRIPTION SEE FOLLOWING PAGES)** ***Operations to be done each time before you drive off:*** - Ensure that the air reservoir of braking and air suspension systems have reached their operating pressure. - Drain the water and condensation from the system. - Check air suspension bellows for sign of damage and incorrect seating.	INITIALLY AFTER 2 WEEKS *	EVERY 26 WEEKS (TWICE ANNUALLY)	ANNUALLY **
-	Visual inspection. Check all component parts for damage and wear.		●	
1	Check condition of air springs.		●	
2	Check shock absorber fastening for the correct torque loading. Field check of torque settings with a calibrated torque wrench: ✓ M20 (SW 30) **M = 550 Nm** When mounting new shock absorber kit: ✓ M20 (SW 30) **M = 200 Nm + 180° tightening angle**	●		●
3	Check the axle-clamp U-bolts for the correct torque loadings. Field check of torque settings with a calibrated torque wrench: ✓ M22 (SW 32) **M = 600 Nm** ✓ M24 (SW 36) **M = 800 Nm** When mounting new axle clamp U-bolts: ✓ M22 (SW 32) **M = 600 Nm (+25/-0)** ✓ M24 (SW 36) **M = 800 Nm (+50/-0)**	●		●
4	Check the pivot bolts for the correct torque loadings. Field check of torque settings with a calibrated torque wrench: ✓ M27 (SW 41) **M = 1000 Nm** When mounting new trailing arms: ✓ M27 (SW 41) **M = 250 Nm + 270° tightening angle + ¼ of thread greased**	●		●
5	Check air spring & offset plate fastening for the correct torque loadings. Field check of torque settings with a calibrated torque wrench: ✓ A: M12 (SW 19) **M = 30 Nm** ✓ B: M12 (SW 19) **M = 50 Nm** ✓ Offset plate M12 (SW 19) **M = 50 Nm** ✓ Offset plate M16 (SW 24) **M = 200 Nm** When mounting new air springs / offset plates: ✓ A: M12 (SW 19) **M = 30 Nm (+10/-0)** ✓ B: M12 (SW 19) **M = 66 Nm (+0/-16)** ✓ Offset plate: M12 (SW 19) **M = 66 Nm (+0/-16)** ✓ Offset plate: M16 (SW 24) **M = 200 Nm (+20/- 20)**	●		●
6	Check axle lift for the correct torque loadings. See axle lift data sheets for the correct torque settings for each axle lift.	●		●

*** After the first run under load conditions.**
**** Under extreme conditions with more frequency.**

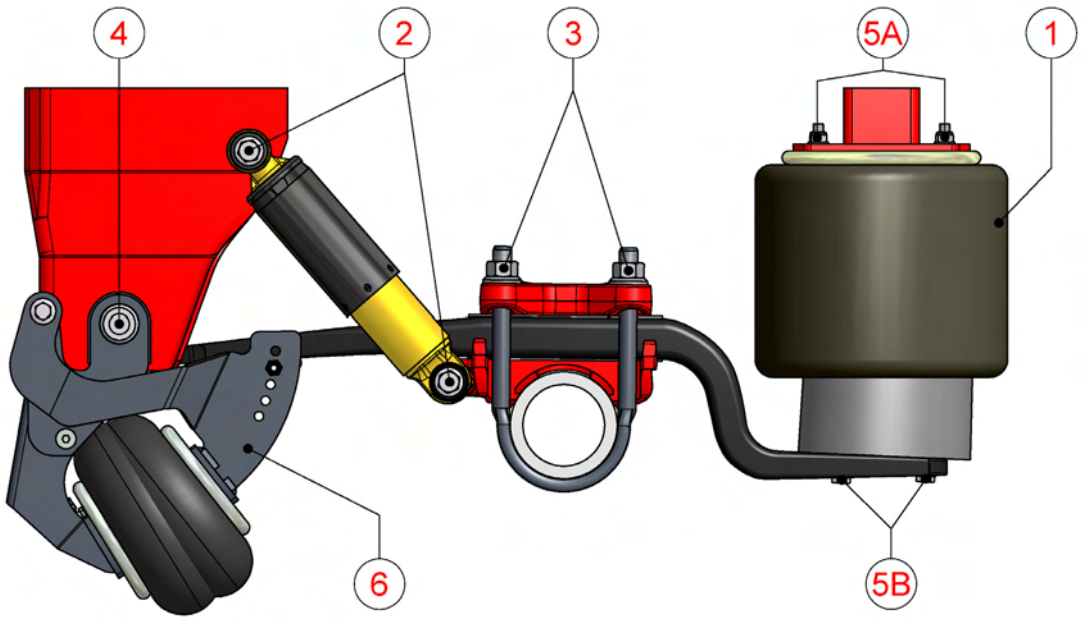

1. AIR SPRINGS

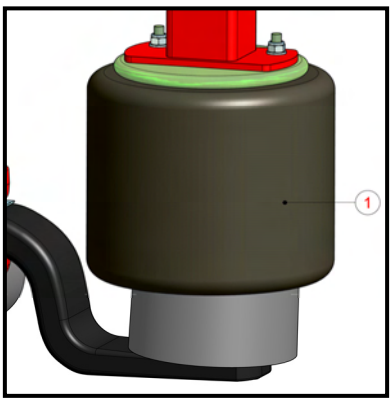

Check air springs, every 6 months, for external damage like surface cracking, abrasion, trapped debris etc.

Notice:
No welding should be carried out on the steel parts of the air springs and pressure vessel! The air suspension should only be filled with compressed air when mounted on the vehicle.

2. SHOCK ABSORBERS

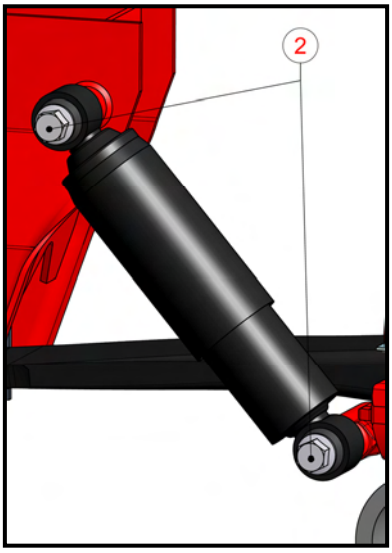

Check shock absorber fastening annually and initially after 2 weeks.
Check lower and upper shock absorber fastening for tightness.
Field check of torque settings with a calibrated torque wrench:

- ✓ M20 (SW 30) **M = 550 Nm**

When mounting new shock absorber kit:

- ✓ M20 (SW 30) **M = 200 Nm + 180° tightening angle**

During vehicle maintenance, “sweating“ shock absorbers are **often criticised and replaced** because the phenomenon “sweating “shock absorber is often confounded with leakage. This “sweating“ is actually a normal and necessary process, by which the piston rod pulls up a light oil film with each stroke. This oil film is necessary to protect the shaft seal against fast abrasion which could lead to the leaking of the shock absorber. On bad roads shock absorbers can reach an operating temperature of over 180°C, causing the oil film, pulled up by the piston rod, to evaporate on the piston rod and depending on environmental condition condensate on the dust cover. This evaporation sets itself as an oil film on the outside of the shock absorber.

PLEASE NOTE THE FOLLOWING:

- **Check the shock absorber in dry conditions. Not in rainy weather conditions.**
- **Light “sweating” is allowed.**
- **With a failure “leakage” the shock absorber will loose all of the oil.**
- **If in doubt, clean the shock absorber and check again after two days.**

In case of failed shock absorber bushes, the shock absorber should be replaced.
Trying to move the shock absorber with it is fastened, enables you to simply detect excessive wear of rubber bushes. Observing the specified torque setting ensures that the steel inner bush will not get twisted and that the torsional motion is accommodated by the rubber part alone.

3. U-BOLTS

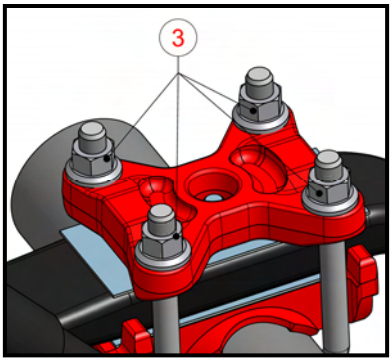

Check U-bolts fastening annually and initially after 2 weeks.
Check nuts of the U-bolts for tightness. If loose, tighten nuts alternately a little at a time.
Field check of torque settings with a calibrated torque wrench:

- ✓ M22 (SW 32) **M = 600 Nm**
- ✓ M24 (SW 36) **M = 800 Nm**

When mounting new axle clamp U-bolts:

- ✓ M22 (SW 32) **M = 600 Nm (+25/-0)**
- ✓ M24 (SW 36) **M = 800 Nm (+50/-0)**

Align the system acc. IM-053-DOC.

Notice:
No welding should be performed on the trailing arm!

4. PIVOT BOLTS

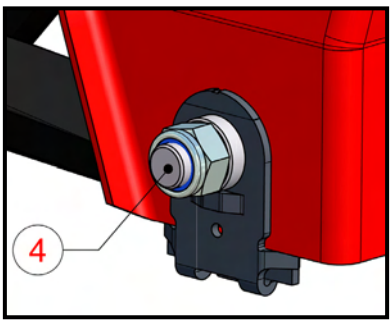

Check pivot bolts fastening annually and initially after 2 weeks.
Using the specified torque settings ensures that the steel inner bush(5) will not get twisted and the torsional motion is accommodated by the rubber part(4) alone.
Check bushes, move the vehicle back and forth slightly with the brake applied, or lever rolled spring ends with the aid of a bar.
No play should be present in the rolled spring eye(6) when doing so.
If the fastening is loose the pivot bolt(2) may be worn or damaged.
Replace damaged parts immediately!

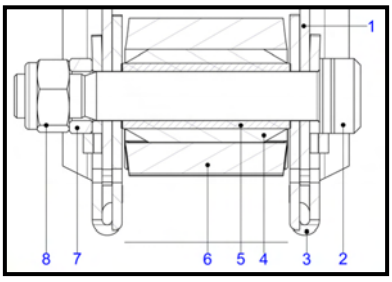

*Hanger bracket **with** axle alignment device:*
Check the wear plates(3) that are located on the hanger bracket(1).
If these are worn to the point that perfect clamping of the steel inner bush(5) is no longer insured, replace the complete rubber bush and the wear plates.

*Hanger bracket **without** axle alignment device:*
Check the wear plates(3) that are welded to the hanger bracket(1).
If these are deteriorated to the point that perfect clamping of the steel inner bush(5) is no longer insured, replace the complete rubber bush and the hanger bracket.

Check the M27 lock nut(8) on the pivot bolt for tightness.
Field check of torque settings with a calibrated torque wrench:

- ✓ M27 (SW 41) **M = 1000 Nm**

When mounting new trailing arms:

- ✓ M27 (SW 41) **M = 250 Nm + 270° tightening angle + ¼ of thread greased**

Also when mounting a trailing arm align the system acc. IM-053-DOC.

5. AIR SPRING & SUPPORT

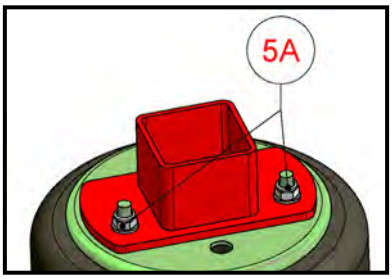

Check air spring (& support) fastening annually and initially after 2 weeks.
The different types of air springs can be mounted directly on the trailing arm or with a seperate bellow support. This depends on the type of air suspension system used and the desired air spring offset.

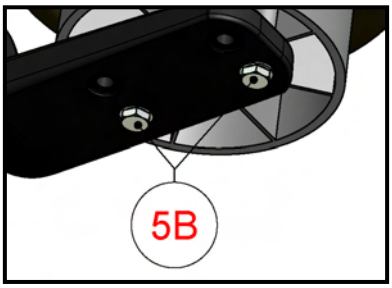

Check air spring & support fixing bolts or nuts for tightness.
Field check of torque settings with a calibrated torque wrench:

- ✓ A: M12 (SW 19) **M = 30 Nm**
- ✓ B: M12 (SW 19) **M = 50 Nm**
- ✓ Offset plate M12 (SW 19) **M = 50 Nm**
- ✓ Offset plate M16 (SW 24) **M = 200 Nm**

When mounting new air springs / offset plates:

- ✓ A: M12 (SW 19) **M = 30 Nm (+10/-0)**
- ✓ B: M12 (SW 19) **M = 66 Nm (+0/-16)**
- ✓ Offset plate: M12 (SW 19) **M = 66 Nm (+0/-16)**
- ✓ Offset plate: M16 (SW 24) **M = 200 Nm (+20/- 20)**

6. AXLE LIFT

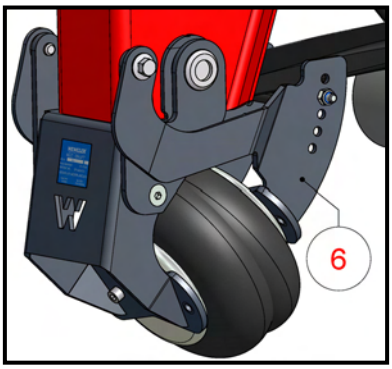

Check axle lift fastening annually and initially after 2 weeks.

The torque settings for the axle lifts depends on the type of axle lift.
See the axle lift data sheets for the corresponding torque settings for each axle lift.

GENERAL INFORMATION

- ***Suspension Stop***

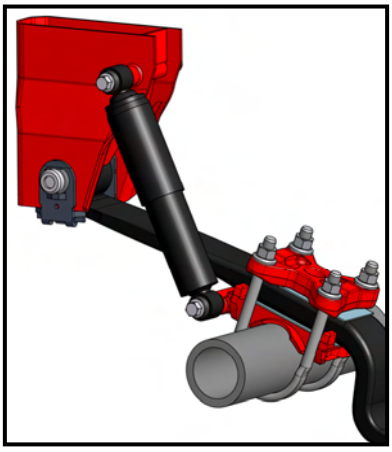

The air suspension systems have been engineered so that the shock absorber acts as the suspension stop.

The shock absorbers can withstand heavy-duty service, which obviates the need for arrester cables or other suspension stops.

In order to cope with the situation where the air suspension system has lowered without air, a rubber buffer in the air spring exists.

If an air spring failure develops, the rubber buffer inside enables you to run (without air) at very low speed for a short period of time. This will help you to get to the nearest service station. To prevend further damage, always make sure that there is enough clearance for all moving parts.

- ***Lifting and lowering valve***

Use the raise-lower valve ONLY for loading and unloading.

When driving the vehicle, be sure that you have selected “driving position” on the valve.

Driving with the air suspension valve set to “RAISE” may cause damage to the load, the semi-trailer, the brakes and the suspension system, and leads to shock absorber overloading and eventually the failure of the system.

AIR SUSPENSION SYSTEM INSTALLATION INSTRUCTIONS & GUIDELINES

1. *Set spring track.*

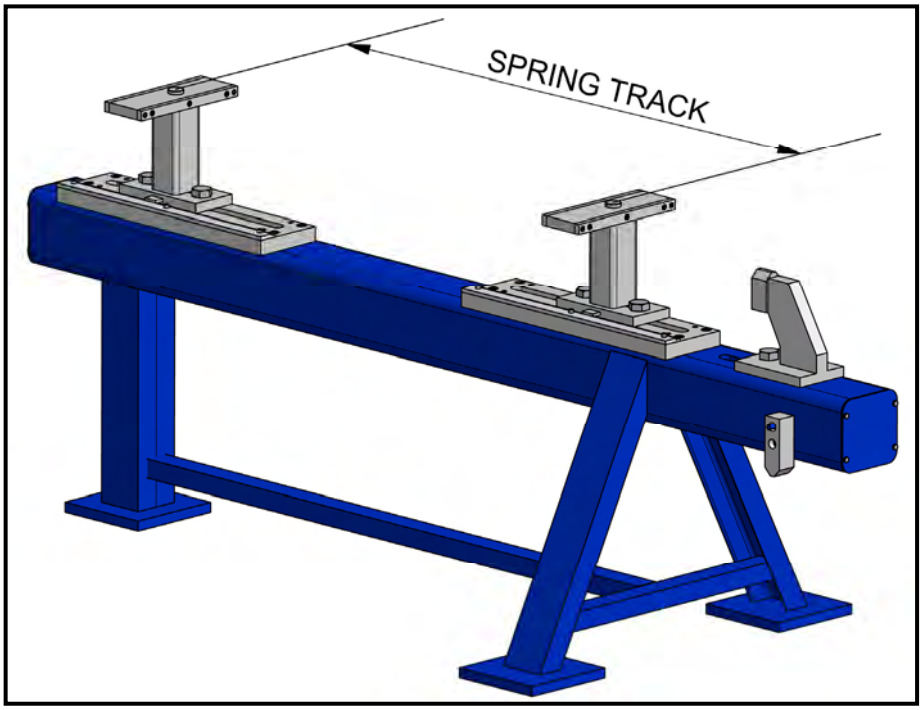

2. *Place axle seats.*

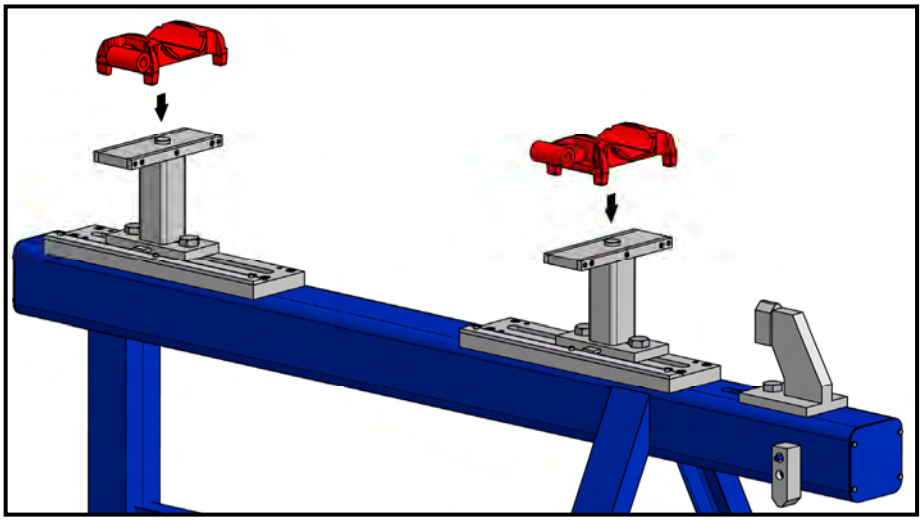

3. *Place axle.*

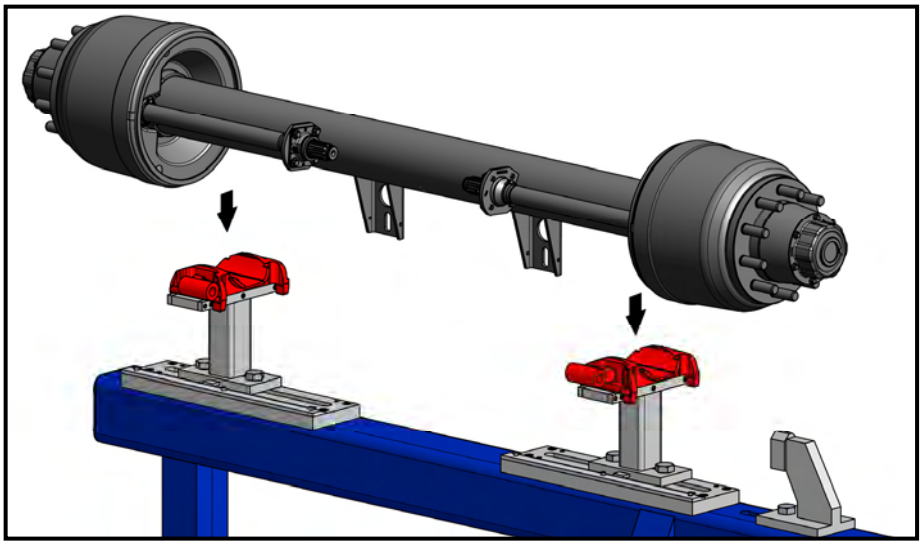

4. *Align axle.*

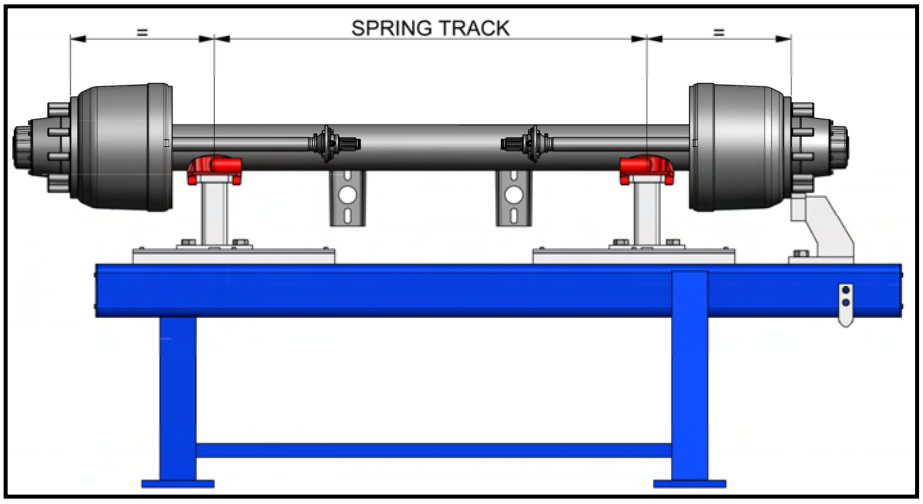

5. *Check position air cylinder bracket for drum brakes or booster angle in case of disc brakes. Mind under- or overslung systems.*

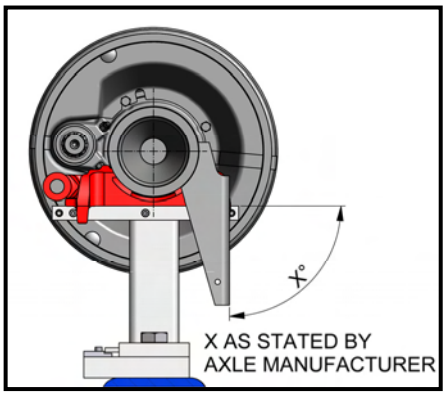

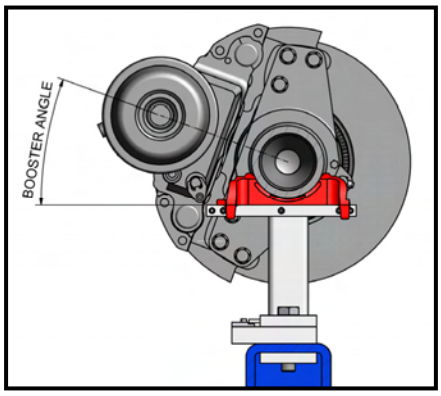

6. *Tack weld axle seats.*

TO PREVENT DAMAGE TO THE BEARINGS, NEVER CONNECT THE EARTH CONNECTOR TO THE AXLE HUB OR WHEEL END!

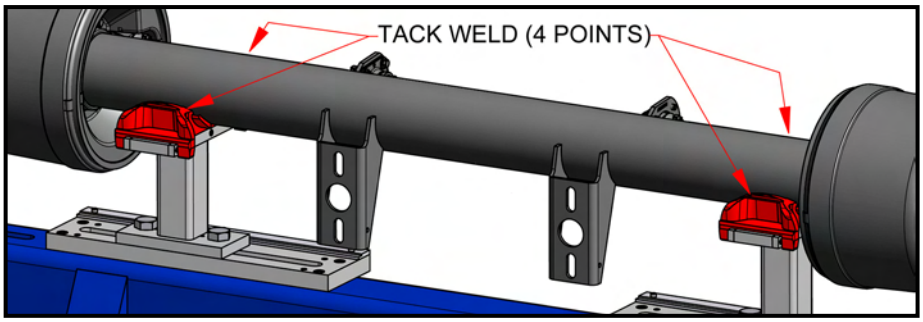

7. *Place axle on supports.*

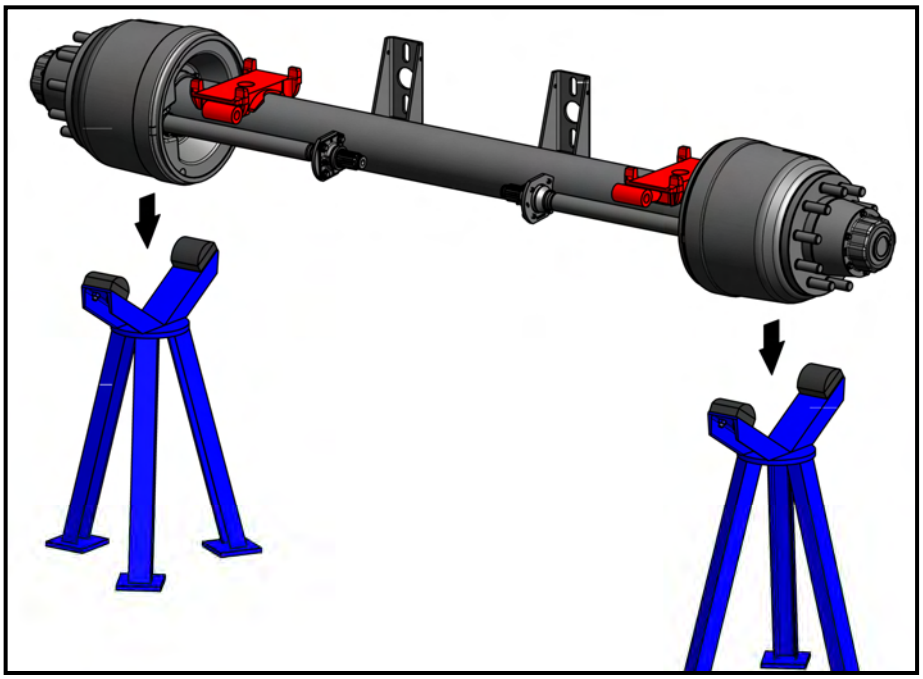

8. *Welding preperation*

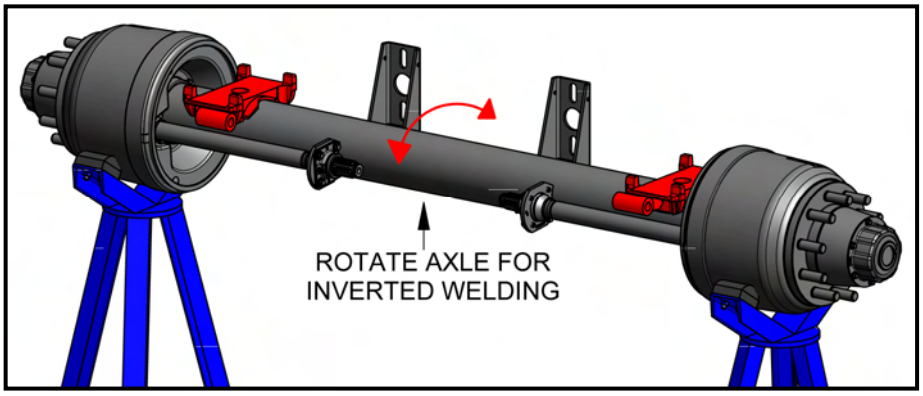

9. *Inverted welding. (WM-A-DOC)*

INVERTED WELDING

ROTATE AXLE ACCORDING STEP 8 AND WELD AXLE SEATS COMPLETE TO THE AXLE.

DO NOT WELD AXLE SEAT TO TRAILING ARM!

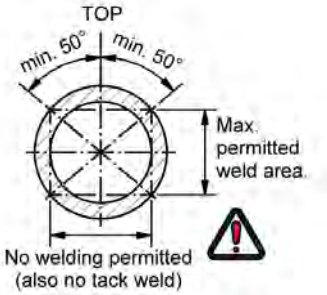

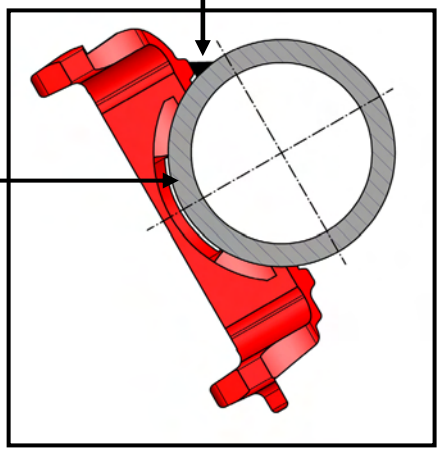

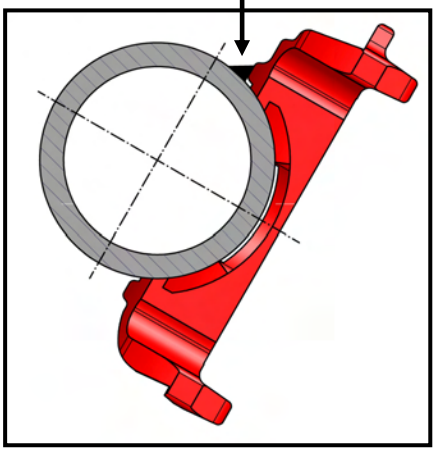

TO PREVENT DAMAGE TO THE BEARINGS, NEVER CONNECT THE EARTH CONNECTOR TO THE AXLE HUB OR WHEEL END!

10. *Place trailing arms, U-bolt plate, U-bolts and nuts (& washers).*

DO NOT TIGHTEN AT TORQUE BEFORE ALIGNING!

Always place center bolt ***head*** *in the axle seat!*

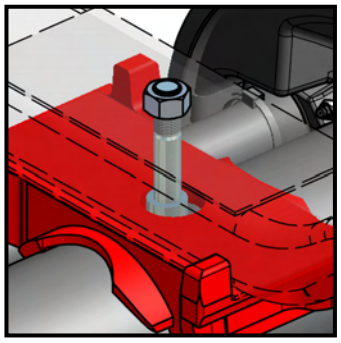

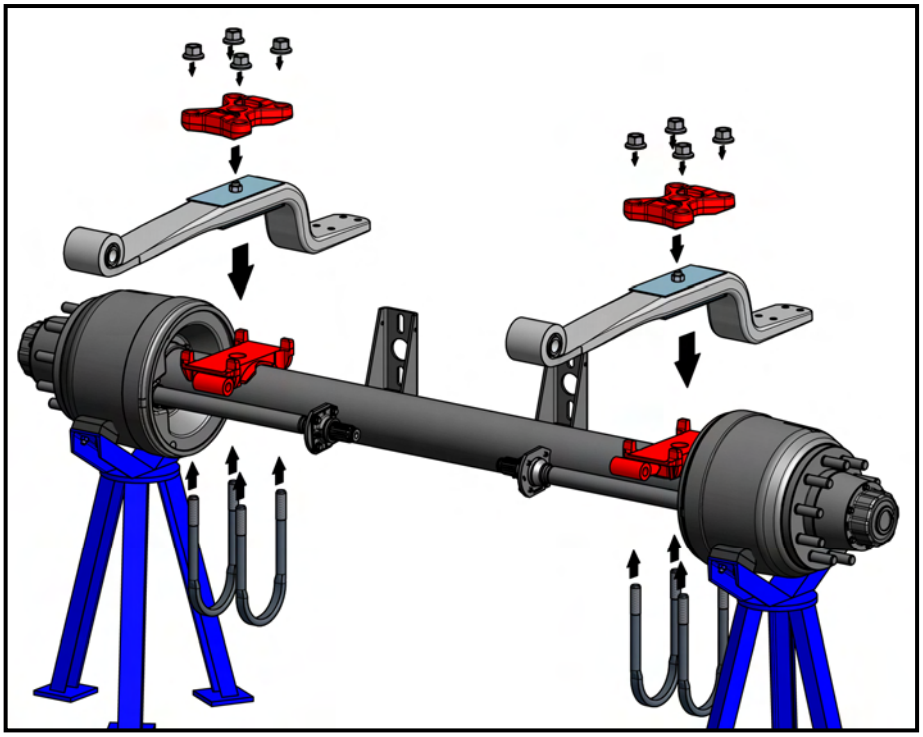

11. *Align trailing arms with axle.*

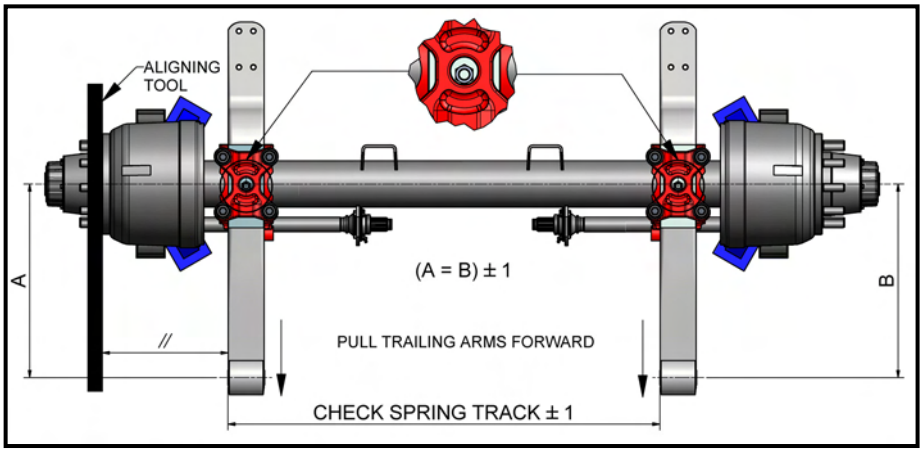

12. *Tighten U-bolt at torque. See image for tightening sequence. (IM-052)*

DO NOT WELD U-BOLT PLATE TO TRAILING ARM!

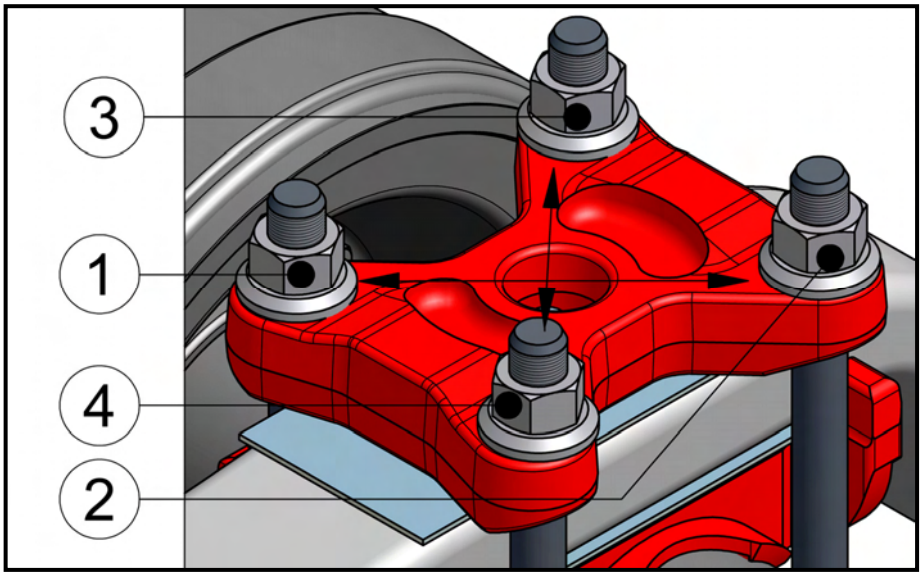

After step **12** there are two options to complete the system assembly:

a. First assemble the hanger brackets to the system and then weld the complete system to the trailer chassis (**follow steps 13-21**).

b. First weld the hanger brackets and pedestals (if applied) to the trailer chassis and then mount the air suspension with axle to the hangerbrackets and pedestals (**follow steps 22-29**).

System Assembly before mounting on chassis

13. *Place hanger brackets and pivot bolts and use mounting tool (as shown in drawing) to tighten the pivot bolt at ride height. Tighten pivot bolt at torque. (IM-052)*

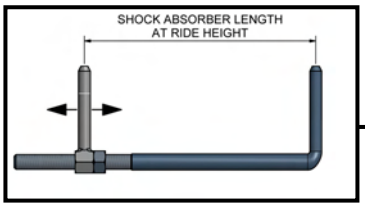

13.1 - MOUNTING TOOL

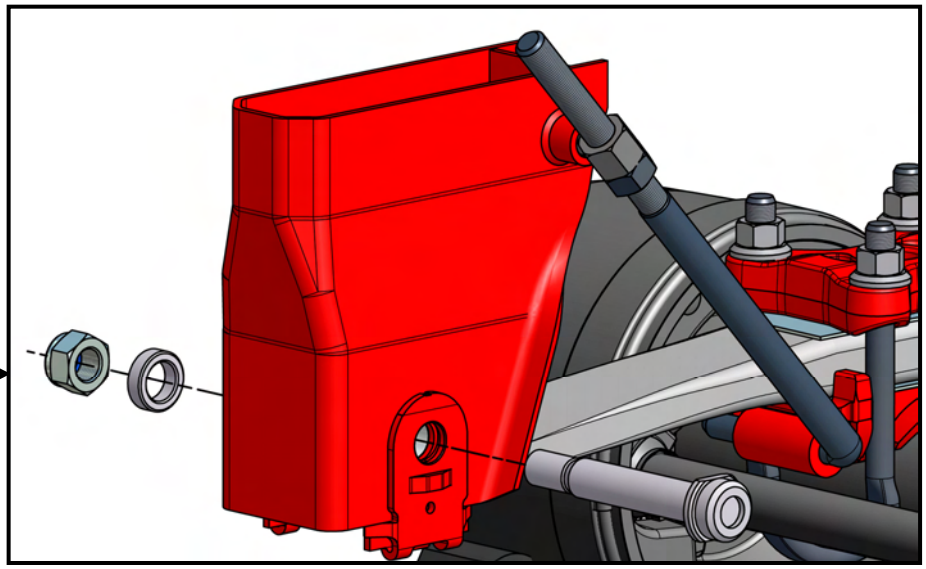

14. *Remove mounting tool and place shock absorbers so that the code can be read. And, if present, follow the instructions on the shock absorber.*
Tighten top & bottom at torque. (IM-052)

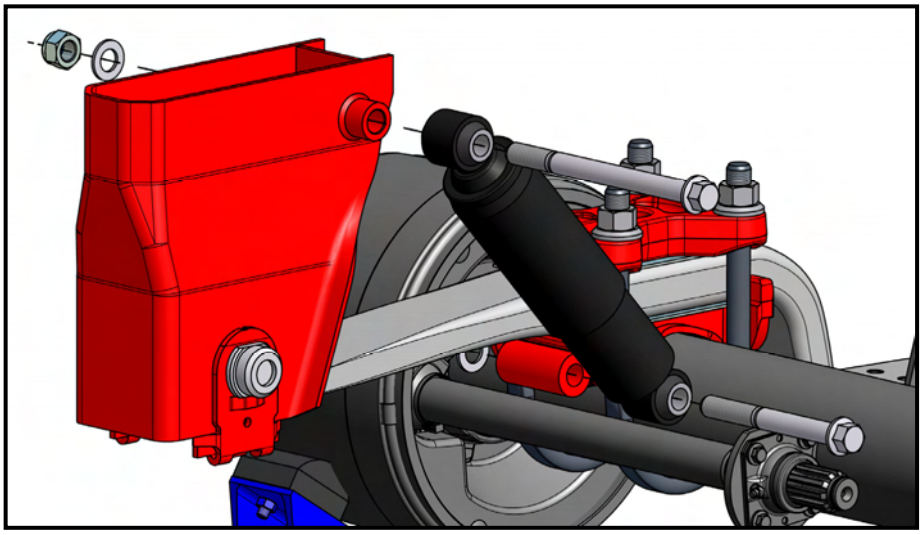

15. *Place system upside down on to the chassis (all three axles).*

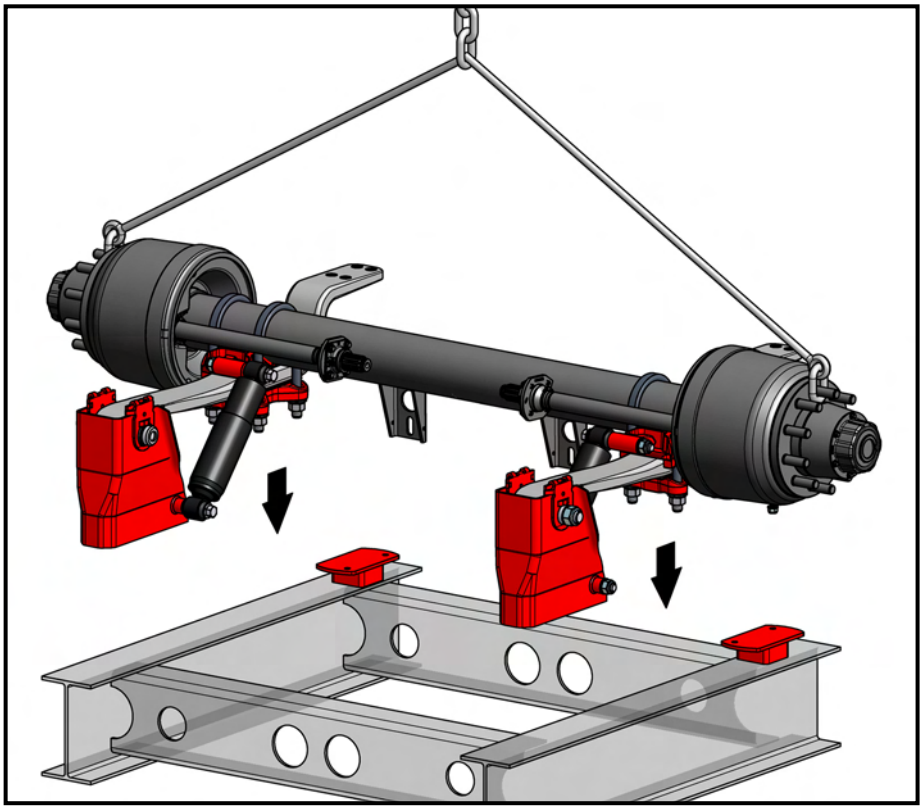

16. *Align all three axles within tolerances.*

A = Kingpin.
B to G are axle centers.

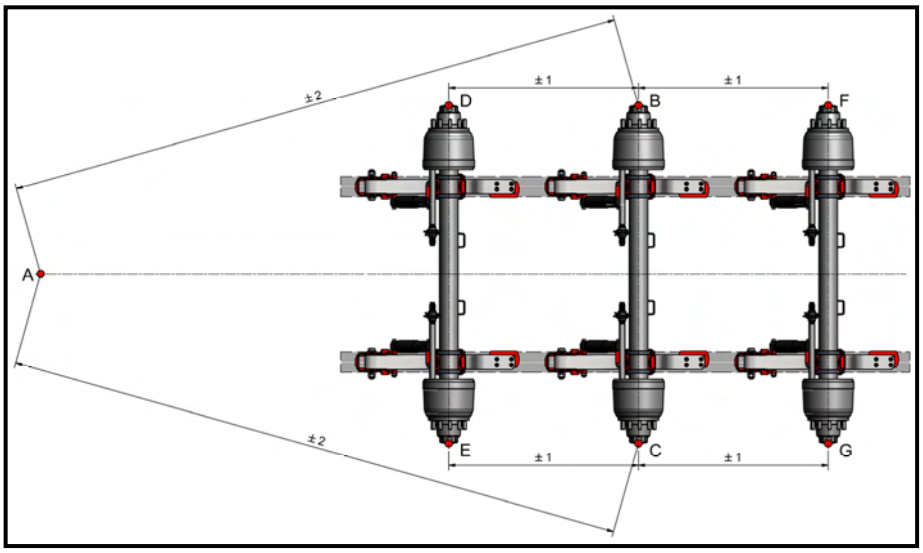

17. *Welding hanger brackets, pedestals & bracings. (WM-C-DOC)*

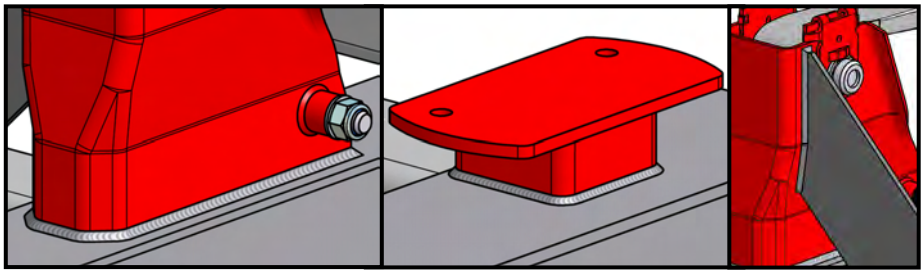

18. *Paint preparation.*

Place a painting tool between the trailing arm & pedestal to prevend the system from dropping down on the chassis before painting.

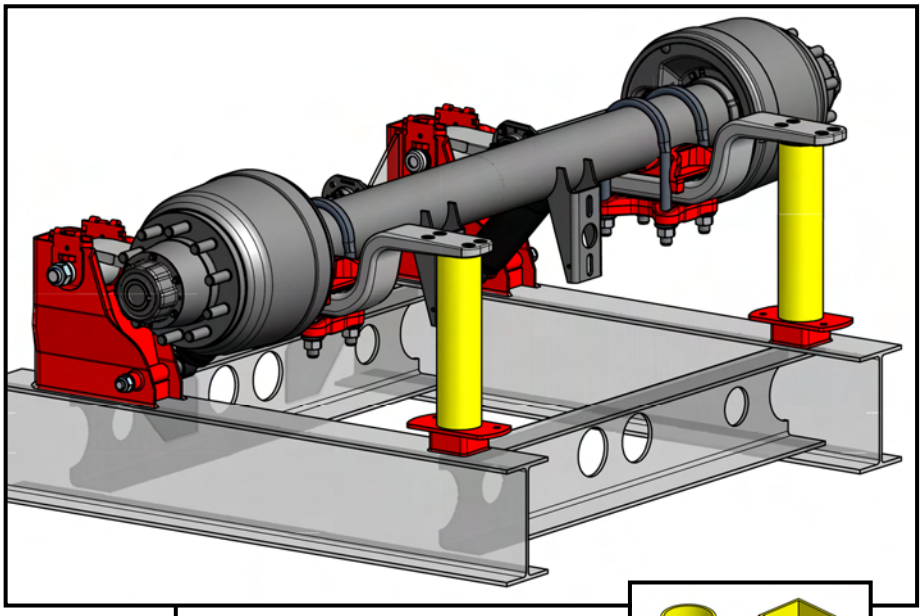

18.1 - PAINTING TOOL (SHAPE & MATERIAL IS FREE)

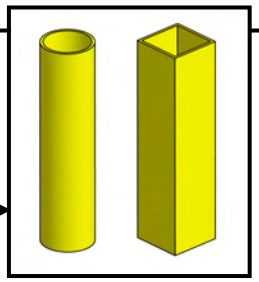

19. *Painting suspension system + trailer.*

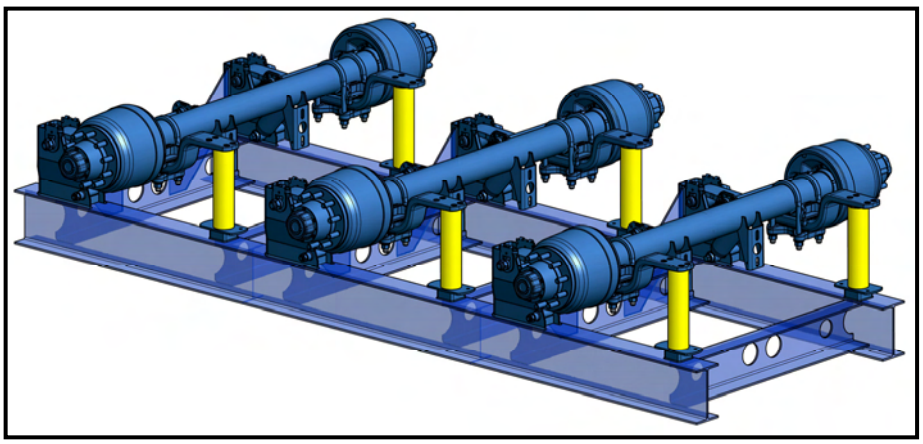

20. *Final assembly. Mount air spring bellows on all axles. Tighten at torque. (IM-052)*

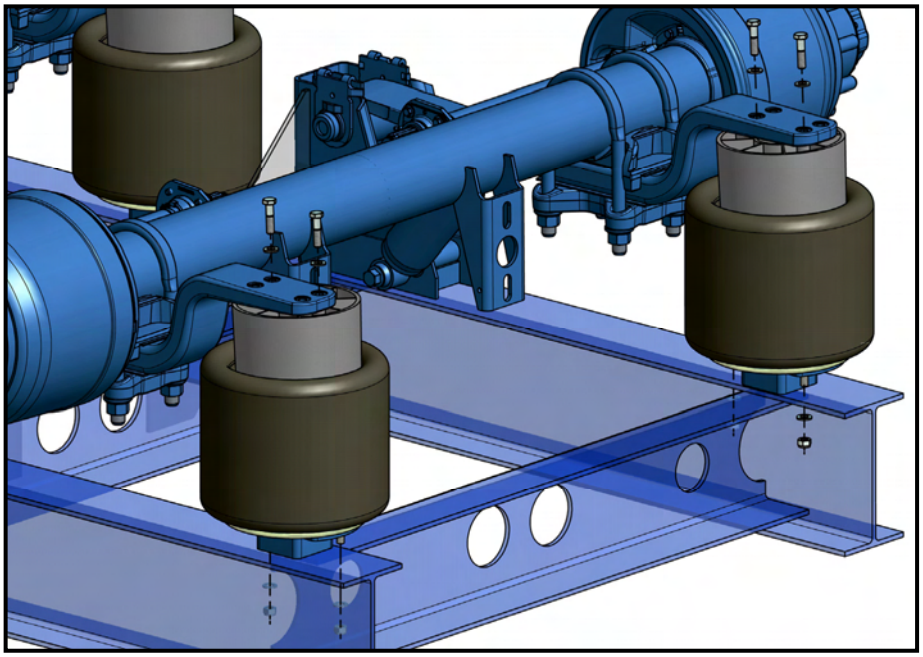

21. *Finished product (Ready for wheel mounting).*

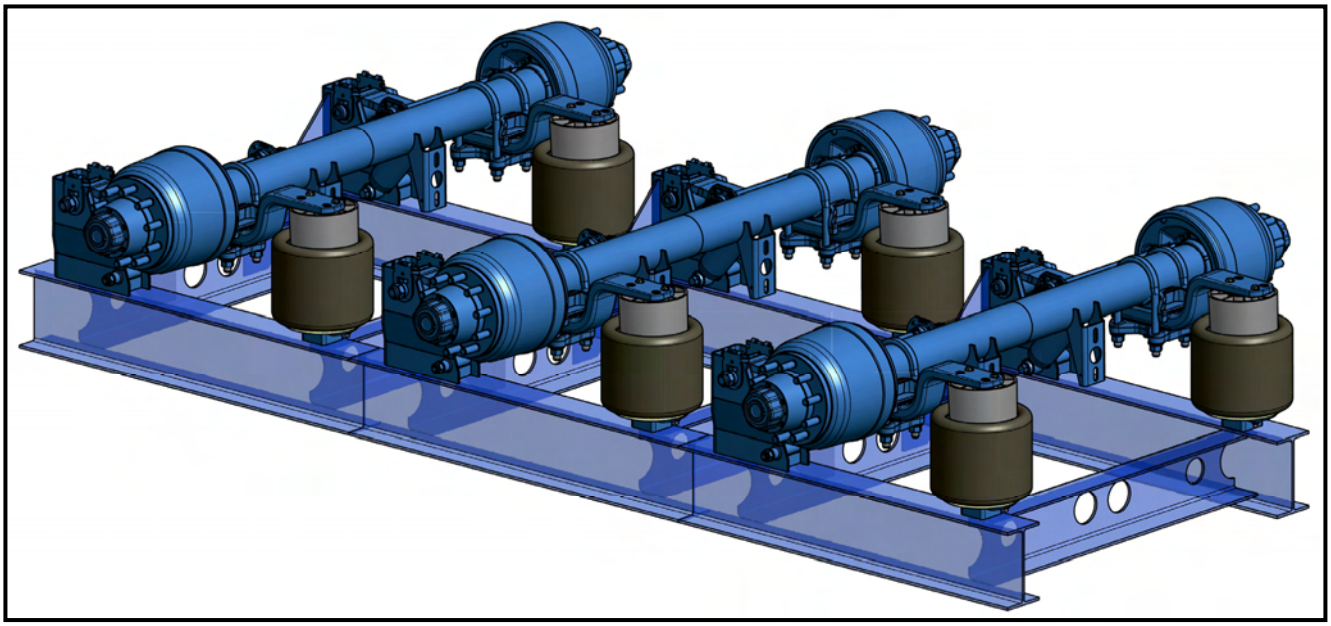

Chassis welding preperation before mounting suspension system

22. *Welding hanger brackets, pedestals & bracings. (WM-C-DOC)*

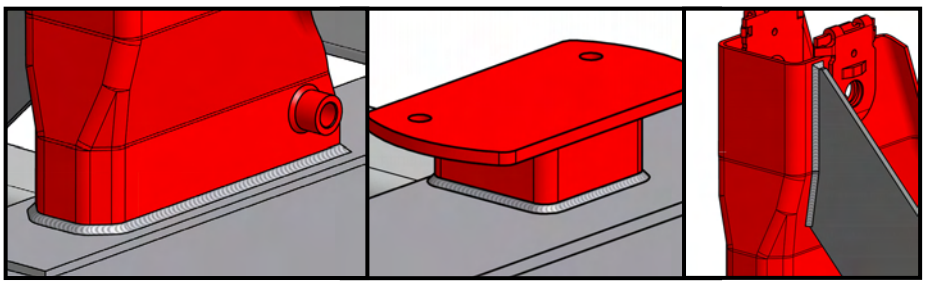

23. *Paint preparation.*

Cover all areas which must be clear from paint. See instruction IM-053-DOC.

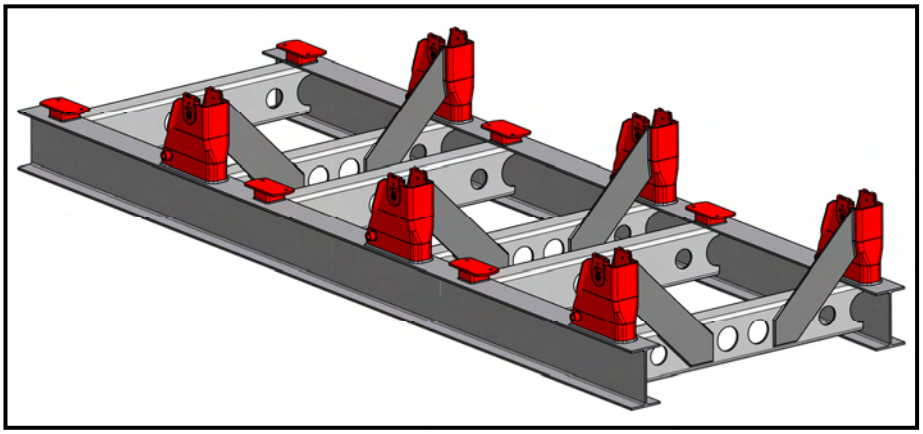

24. *Place suspension system on the chassis with hanger brackets after painting.*

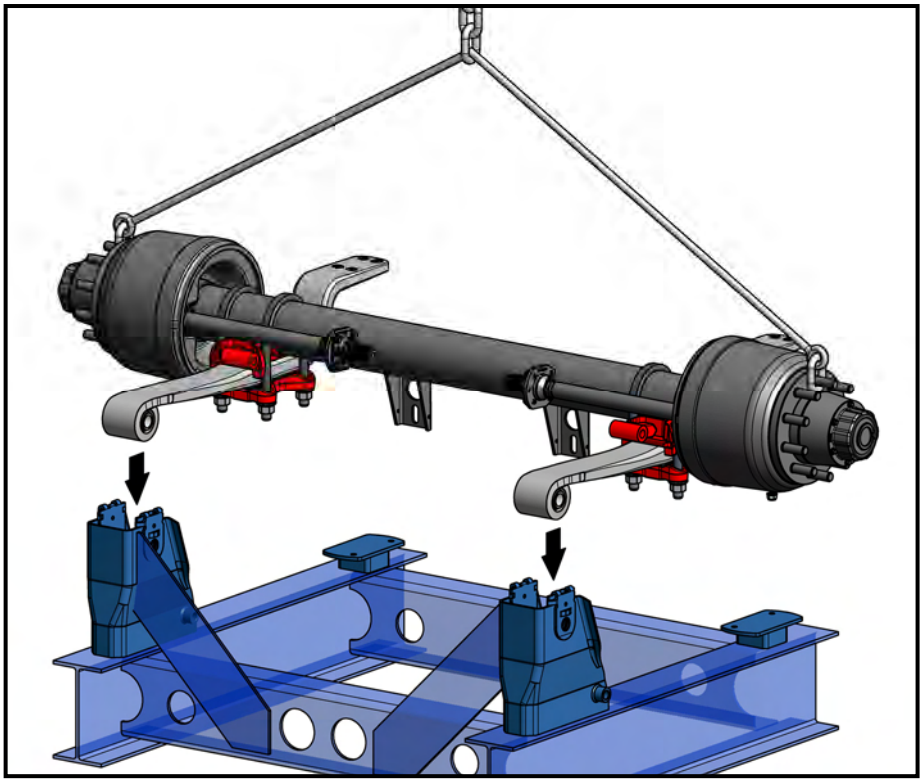

25. *Place pivot bolts and tighten the pivot bolts at ride height. Align the axle in the axle seat. When aligning takes place in the hangerbracket. Tighten* ***AFTER*** *aligning,* ***see step 26.*** *(IM-052 & IM-053-DOC).*

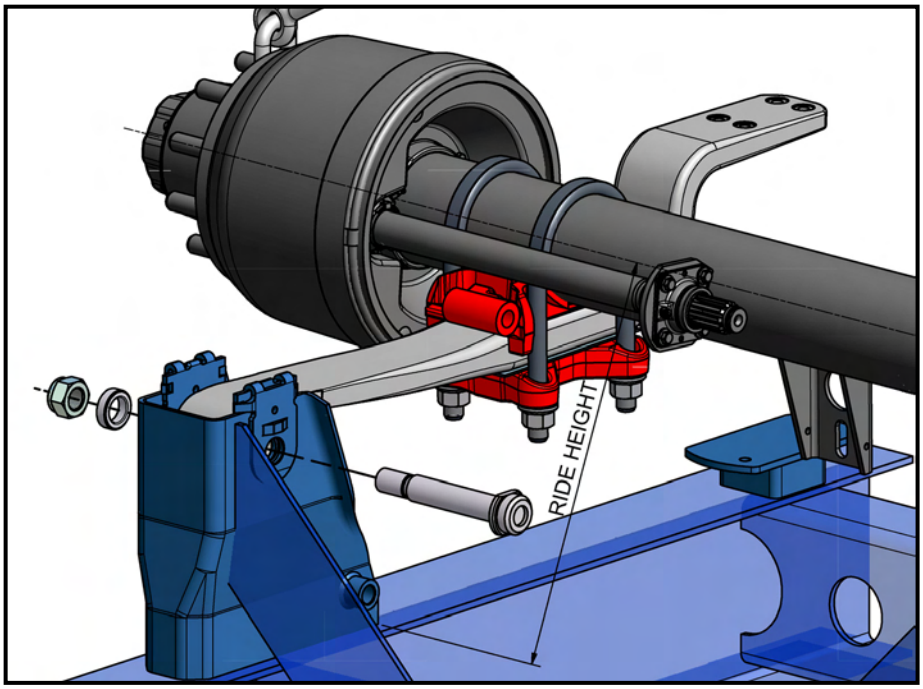

26. *Align all three axles within tolerances.*

A = Kingpin.
B to G are axle centers.

*Tighten pivot bolts in case of adjustable hanger brackets (**see step 25**).*

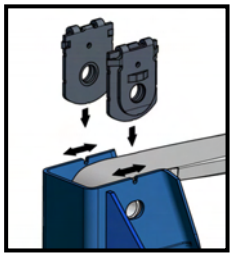

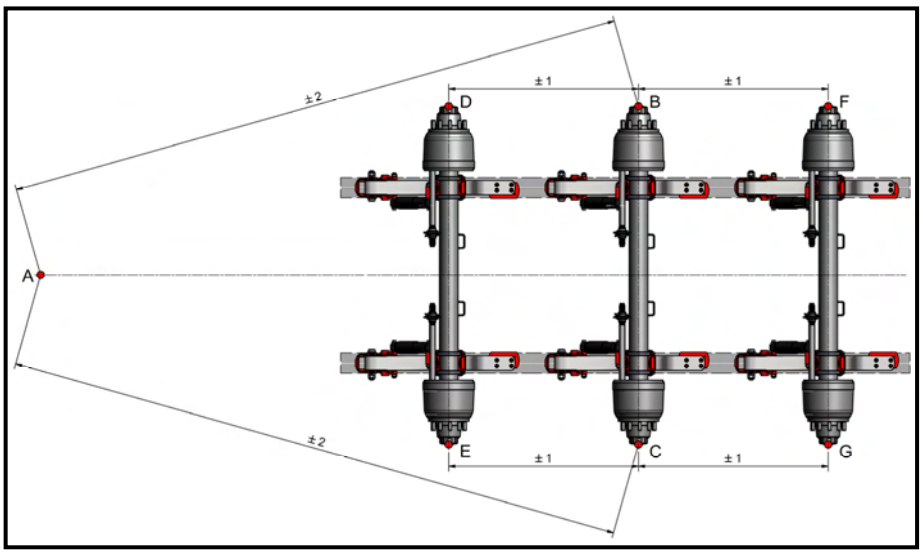

27. *Place shock absorbers so that the code can be read. And, if present, follow the instructions on the shock absorber.*
Use a tool between the trailing arm & pedestal to prevend the system from dropping down on the chassis Tighten top & bottom at torque. (IM-052)

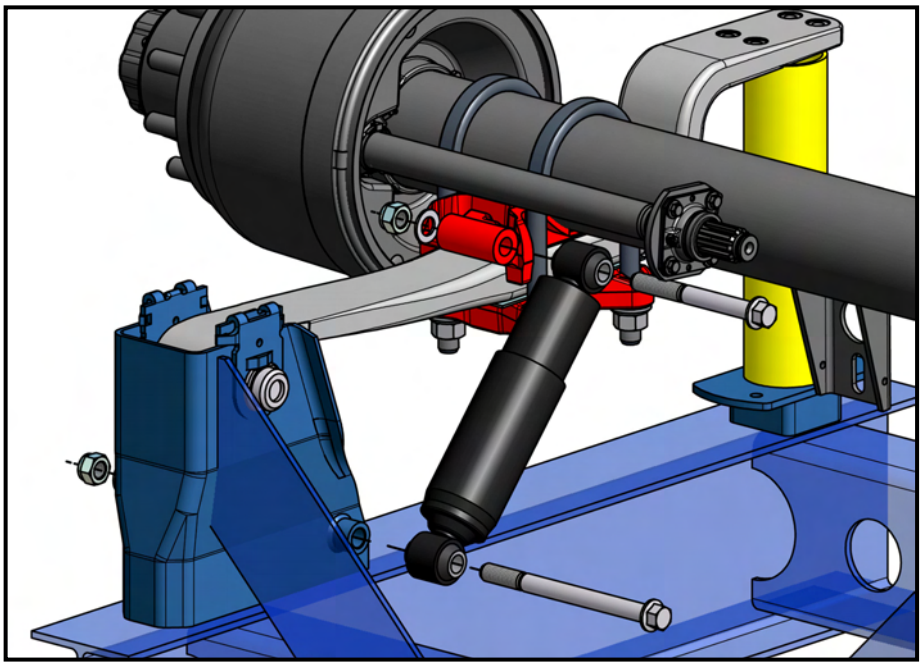

28. *Final assembly.*
Mount air spring bellows on all axles.
Tighten at torque.
(IM-052)

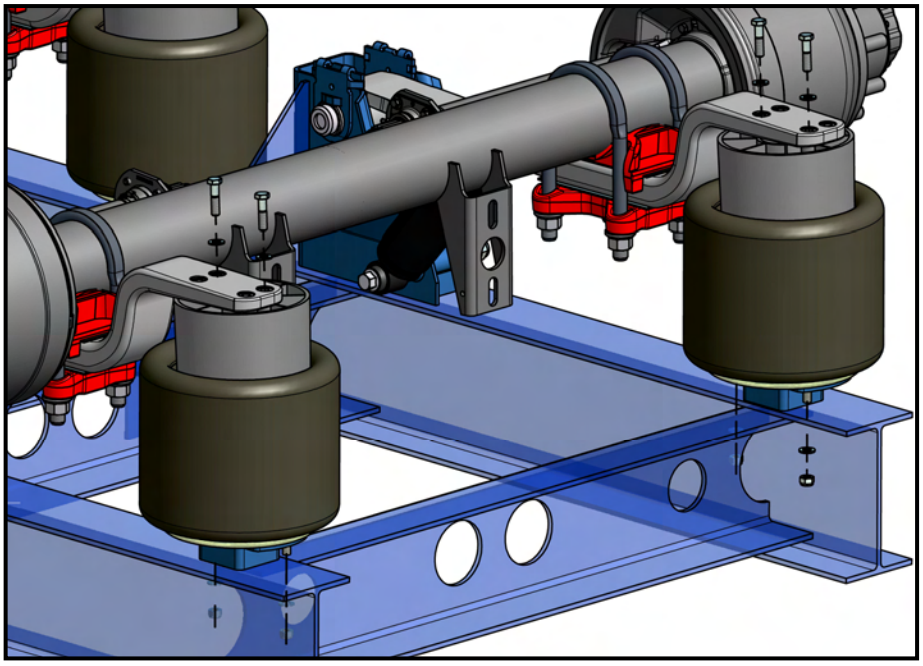

29. *Finished product (Ready for wheel mounting).*

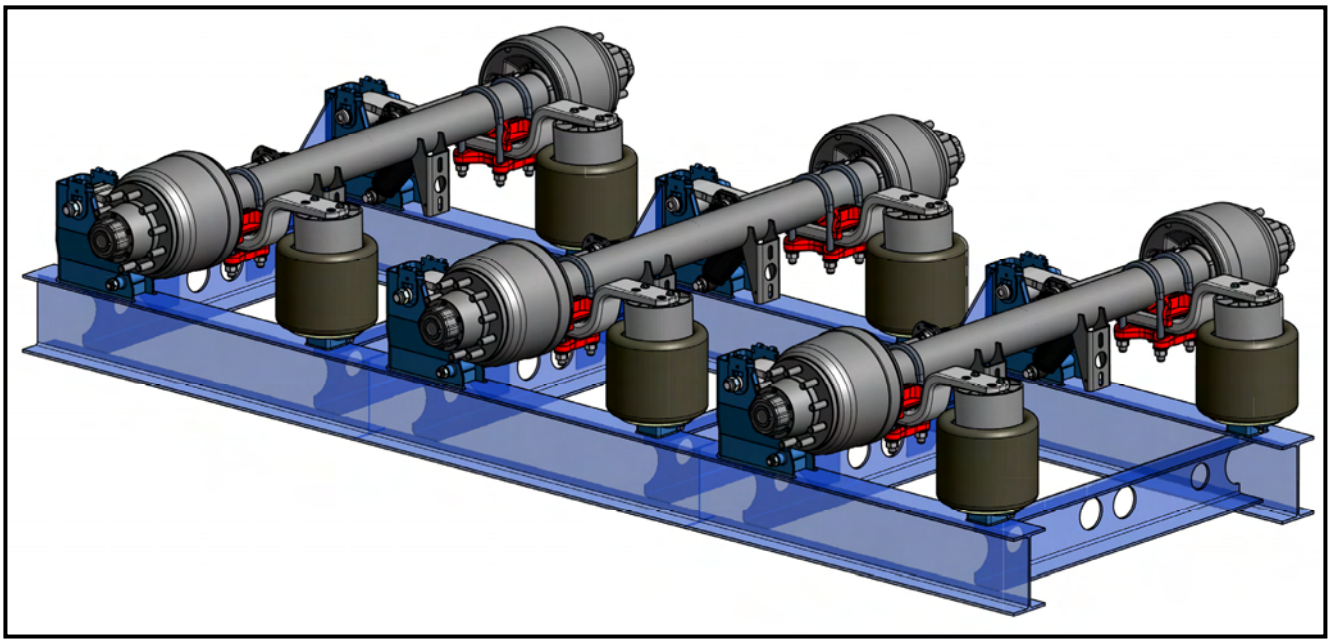

APPENDIX A

INSTRUCTION GB	Weweler	IM–052

TIGHTENING INSTRUCTION

FASTENER		Dim.	FIRST ASSEMBLY TORQUE + ANGLE ④ Step 1 torque [Nm]	tole–rance	Step 2 angle [degrees]	tole–rance	FOR AUDITING ONLY Checking torque after assembly [Nm]	FIELD CHECK Checking torque during maintenance [Nm]
Pivot bolt (100mm ①)	③⑦	M27x2	250	$^{+25}/_{-0}$	270	$^{+27}/_{-13}$	process control	1000
Pivot bolt (75mm ②)	③⑦	M27x2	250	$^{+25}/_{-0}$	250	$^{+27}/_{-13}$	process control	1000
Shock absorber bolt M16	③	M16x1,5	170	$^{+17}/_{-0}$	270	$^{+27}/_{-13}$	process control	350
Shock absorber bolt M20 L≥175	③	M20x2	200	$^{+20}/_{-0}$	180	$^{+18}/_{-9}$	process control	550
Shock absorber bolt M20 L<175	③	M20x2	550	$^{+50}/_{-0}$	–	–	450	550
Shock absorber bolt M24	③	M24x3	620	$^{+50}/_{-0}$	–	–	500	620
U–bolt M20	⑤	M20x1,5	600	$^{+25}/_{-0}$	–	–	450	600
U–bolt M22	⑤	M22x1,5	600	$^{+25}/_{-0}$	–	–	450	600
U–bolt M24	⑤⑥	M24x2	800	$^{+50}/_{-0}$	–	–	650	800
Air spring top		M12x1,75	30	$^{+10}/_{-0}$	–	–	25	30
Air spring bottom		M12x1,75	66	$^{+0}/_{-16}$	–	–	50	50
Air spring top (combo–stud)		M22x1,5	66	$^{+0}/_{-16}$	–	–	50	50
Option: offset plate		M12x1,75	66	$^{+0}/_{-16}$	–	–	50	50
Option: offset plate/splitter/axle–lift		M16x2	200	±20	–	–	150	200

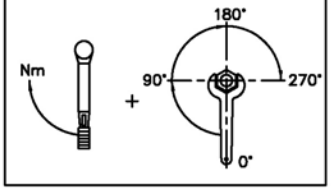

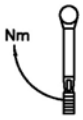

① Suspension system with 95mm, 100mm or 120mm wide trailing arm.

② Suspension system with 75mm wide trailing arm.

③ Tighten at ride height.

④ During angle tightening of the nut/bolt it is essential to secure the counterside.

⑤ Tighten U–bolts evenly and crosswise.

⑥ If a BPW axle with BPW axle clamping parts is used, the instructions of the Bergischen Achsenfabrik for these parts have to be followed.

⑦ At least ¼ of the surface of the thread must be greased.

IM–052–GB–F

WEWELER IMPROVING TRANSPORTATION

WEWELER NEDERLAND B.V.
P.O. BOX 142
7300 AC APELDOORN
THE NETHERLANDS

	drawn:	last rev:
rev:	–	F
date:	20–02–02	08–07–10
by:	FLE	RTS
ckd:		

This sheet is a direct translation of:
IM–052–NL rev.F (Dutch version)

APPENDIX B

WEWELER
MOUNTING / PAINT / ALIGNMENT INSTRUCTION
IM-053-DOC
MOUNTING TOLERANCE
DRIVE DIRECTION
A
2A
SPRING TRACK
L1 ± 1,5
(L1 ± 1,5)
0 ± 4,5
PAINT INSTRUCTION HANGERBRACKET / TRAILING ARM / SHOCK ABSORBER / WEAR PLATES.
The RED marked areas are only allowed to be primed or KTL coated (maximal 30 µm)
- Hangerbrackets: Area Ø 67 on in- and outside.
- Tube for shock absorber mounting on both ends.
- Trailing arm silent block on both ends.
- Shock absorber silent blocks on both ends.
- Wear plates in- and outside (also AL-427 L).
UT001.25...
UT001.36...
UT001.45...
(2 sides)
≥ Ø67 (4 sides)
UT001B...
UT001D...
UT001E...
(2x2 sides)
≥ Ø57 (2 sides)
≥ Ø57 (2x2 sides)
Between plates
≥ Ø67 (2 sides)
UT010A04K
Between plates
≥ Ø67 (4 sides)
AL-427 L
≥ Ø57
UT010A06K
≥ Ø67
AXLE ALIGNMENT INSTRUCTION
ALIGNMENT ON PIVOT BOLT
UT001B... & UT001D... & UT001E... HANGERBRACKETS
UT001C25... & UT001C36... & UT001C45... HANGERBRACKETS
3,75 mm.
NOMINAL
The alignment of the axle takes place immediately after the assembly of the air suspension system.
Because of the slotted holes in the hangerbracket the pivot bolt can be moved over 7,5 mm.
ALIGNMENT IN AXLE SEAT
1. Loosen (U-)Bolt nuts, until the axle can move in clamping.
Note: due to clamping construction the aligning can now be adjusted with ± 4 mm. (each side).
2. Align the axle at ride height.
3. Tighten (U-)Bolts at ride height.
WEWELER
IMPROVING TRANSPORTATION
WEWELER NEDERLAND B.V.
P.O. BOX 142
7300 AV APELDOORN
THE NETHERLANDS
REV.
DATE 2-10-2007
BY RTS
CKD.
DRAWN
LAST REV.
Modification on last revision:

APPENDIX C

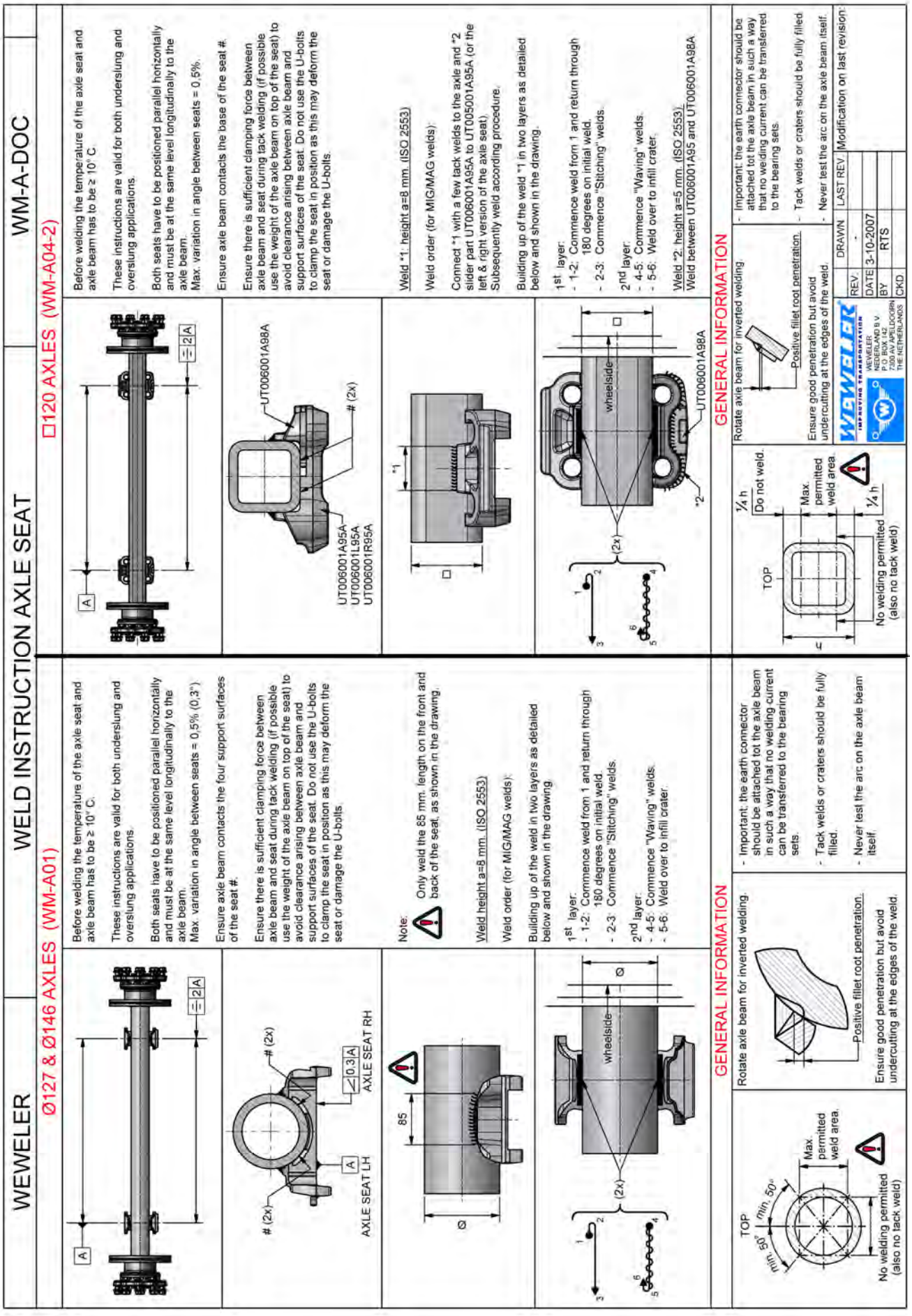
WEWELER
WELD INSTRUCTION AXLE SEAT
WM-A-DOC
Ø127 & Ø146 AXLES (WM-A01)
□120 AXLES (WM-A04-2)
Before welding the temperature of the axle seat and axle beam has to be ≥ 10° C.
These instructions are valid for both underslung and overslung applications.
Both seats have to be positioned parallel horizontally and must be at the same level longitudinally to the axle beam.
Max. variation in angle between seats = 0,5% (0,3°)
Ensure axle beam contacts the four support surfaces of the seat #.
Ensure there is sufficient clamping force between axle beam and seat during tack welding (if possible use the weight of the axle beam on top of the seat) to avoid clearance arising between axle beam and support surfaces of the seat. Do not use the U-bolts to clamp the seat in position as this may deform the seat or damage the U-bolts.
AXLE SEAT LH
AXLE SEAT RH
Note:
Only weld the 85 mm. length on the front and back of the seat, as shown in the drawing.
Weld height a=8 mm. (ISO 2553)
Weld order (for MIG/MAG welds):
Building up of the weld in two layers as detailed below and shown in the drawing.
1st layer:
- 1-2: Commence weld from 1 and return through 180 degrees on initial weld.
- 2-3: Commence "Stitching" welds.
2nd layer:
- 4-5: Commence "Waving" welds.
- 5-6: Weld over to infill crater.
GENERAL INFORMATION
Rotate axle beam for inverted welding.
Positive fillet root penetration.
Ensure good penetration but avoid undercutting at the edges of the weld.
- Important: the earth connector should be attached tot the axle beam in such a way that no welding current can be transferred to the bearing sets.
- Tack welds or craters should be fully filled.
- Never test the arc on the axle beam itself.
TOP
min. 50°
Max. permitted weld area.
No welding permitted (also no tack weld)
UT006001A98A
UT006001A95A
UT006001L95A
UT006001R95A
wheelside
Weld *1: height a=8 mm. (ISO 2553)
Connect *1 with a few tack welds to the axle and *2 slider part UT006001A95A to UT005001A95A (or the left & right version of the axle seat).
Subsequently weld according procedure.
Weld *2: height a=5 mm. (ISO 2553)
Weld between UT006001A95 and UT006001A98A
¼ h
Do not weld.
WEWELER
IMPROVING TRANSPORTATION
WEWELER NEDERLAND B.V.
P.O. BOX 142
7200 AV APELDOORN
THE NETHERLANDS
REV.
DATE 3-10-2007
BY RTS
CKD
DRAWN
LAST REV.
Modification on last revision:

APPENDIX D

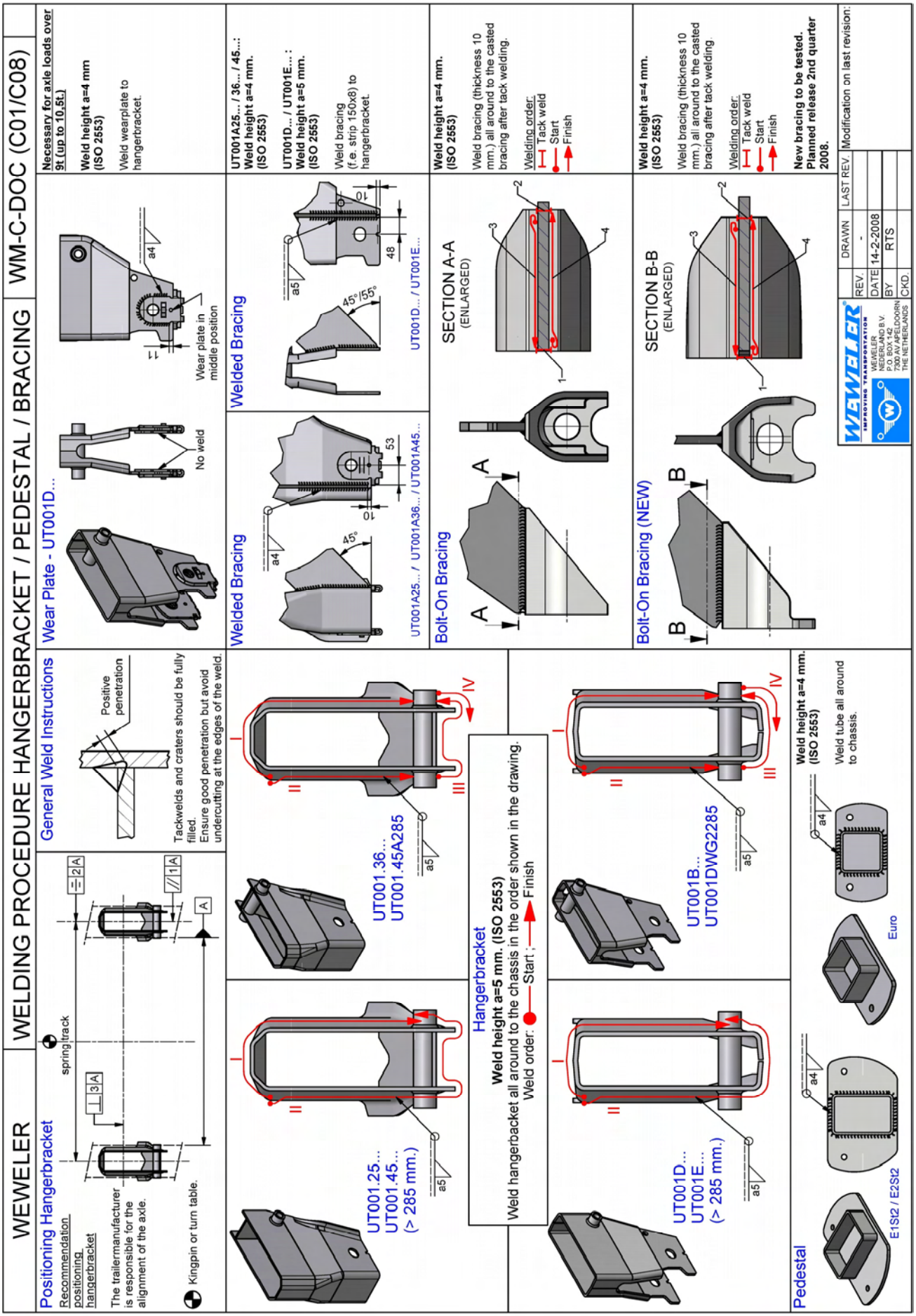
WEWELER
WELDING PROCEDURE HANGERBRACKET / PEDESTAL / BRACING
WM-C-DOC (C01/C08)
Positioning Hangerbracket
Recommendation positioning hangerbracket
The trailermanufacturer is responsible for the alignment of the axle.
Kingpin or turn table.
spring track
General Weld Instructions
Positive penetration
Tackwelds and craters should be fully filled.
Ensure good penetration but avoid undercutting at the edges of the weld.
Wear Plate - UT001D...
No weld
Wear plate in middle position
Necessary for axle loads over 9t (up to 10,5t.)
Weld height a=4 mm (ISO 2553)
Weld wearplate to hangerbracket.
Welded Bracing
UT001A25... / UT001A36... / UT001A45...
UT001A25... / 36... / 45...: Weld height a=4 mm. (ISO 2553)
UT001D... / UT001E... : Weld height a=5 mm. (ISO 2553)
Weld bracing (f.e. strip 150x8) to hangerbracket.
UT001D... / UT001E...
Bolt-On Bracing
SECTION A-A (ENLARGED)
Weld height a=4 mm. (ISO 2553)
Weld bracing (thickness 10 mm.) all around to the casted bracing after tack welding.
Welding order:
Tack weld
Start
Finish
Bolt-On Bracing (NEW)
SECTION B-B (ENLARGED)
New bracing to be tested. Planned release 2nd quarter 2008.
UT001.25... UT001.45... (> 285 mm.)
UT001.36... UT001.45A285
UT001D... UT001E... (> 285 mm.)
UT001B... UT001DWG2285
Hangerbracket
Weld height a=5 mm. (ISO 2553)
Weld hangerbacket all around to the chassis in the order shown in the drawing.
Weld order: Start ; Finish
Pedestal
E1St2 / E2St2
Euro
Weld tube all around to chassis.
DRAWN
LAST REV.
Modification on last revision:
REV.
DATE 14-2-2008
BY RTS
CKD.
WEWELER
IMPROVING TRANSPORTATION
WEWELER NEDERLAND B.V.
P.O. BOX 142
7300 AV APELDOORN
THE NETHERLANDS