granning
axle and suspension solutions

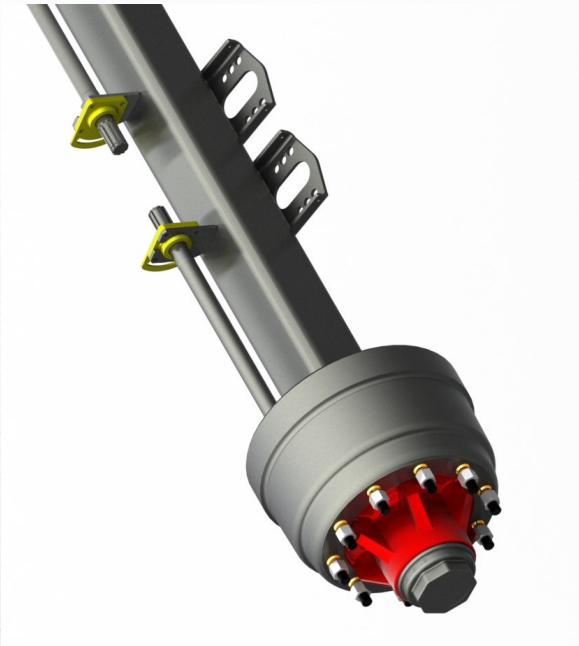

Axle Service Manual

950 Series Drum Brake 37spline

External Drum, 420mm x 180mm

Updated: October 2019
80260 REV C

UNITED KINGDOM | IRELAND | NORTHERN IRELAND | POLAND

Whilst every effort has been made to ensure that this manual is as accurate as possible, Granning cannot be held responsible for any omissions or errors. We reserve the right to alter specification without prior notice.

Revision: Oct 2019

Granning are one of Europe's primary Air Suspension and Axle Manufacturers.
We are experts in road vehicle axles, brakes and suspensions. Operators throughout the world are reaping the benefits of our road friendly air suspensions and high quality non driven axles.
We hope you get many years of service from your Granning axle and in order to ensure you do, please follow the instructions contained in this manual.

Please record the below information as you may require it when identifying service components.

Axle information record:

Date Fitted:	/ /
Chassis Number:	
Axle Model Code:	/ /
Axle Serial Number:	

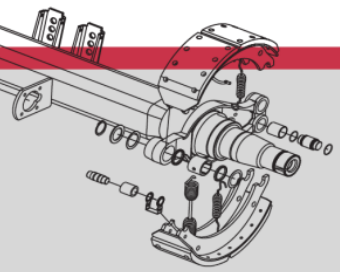

Ireland
T. +353 (0) 45 897 553
F. +353 (0) 45 848 638

UK
T. +44 (0) 1925 817 689
F. +44 (0) 1925 817 153

NI
T. +44 (0) 2890 740 055
F. +44 (0) 2890 752 718

Poland
T. +48 (0) 29 753 1616
F. +48 (0) 29 753 1604

Contents

Health & Safety	3
Axle Installation	4
Wheel Fastening	8
Servicing Of Axle	9
Fitting Of Components	11
Trouble Shooting	22

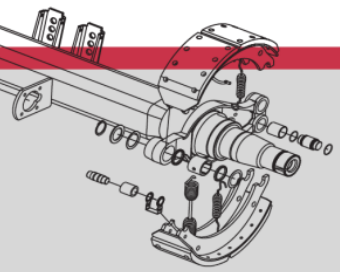

Ireland
T. +353 (0) 45 897 553
F. +353 (0) 45 848 638

UK
T. +44 (0) 1925 817 689
F. +44 (0) 1925 817 153

NI
T. +44 (0) 2890 740 055
F. +44 (0) 2890 752 718

Poland
T. +48 (0) 29 753 1616
F. +48 (0) 29 753 1604

Health and Safety Guidelines

Do ✓

ALWAYS use genuine GRANNING components. ✓

ALWAYS use suitable tools for the job. ✓

ALWAYS work in good, safe working conditions. ✓

ALWAYS use safety equipment. ✓

Always follow your own Health and Safety systems. ✓

Don't ✗

NEVER work under an unproped body or axle. ✗

NEVER leave an un-propped body or axle unattended. ✗

NEVER work without supervision. ✗

All Granning axles employ Asbestos Free friction material, however, when servicing a used axle, take care Asbestos might be present in brake linings. Always assume that Asbestos is present and take appropriate steps to ensure safety of all involved

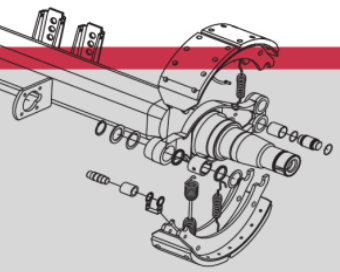

Ireland
T. +353 (0) 45 897 553
F. +353 (0) 45 848 638

UK
T. +44 (0) 1925 817 689
F. +44 (0) 1925 817 153

NI
T. +44 (0) 2890 740 055
F. +44 (0) 2890 752 718

Poland
T. +48 (0) 29 753 1616
F. +48 (0) 29 753 1604

Axle Serial Badge Information

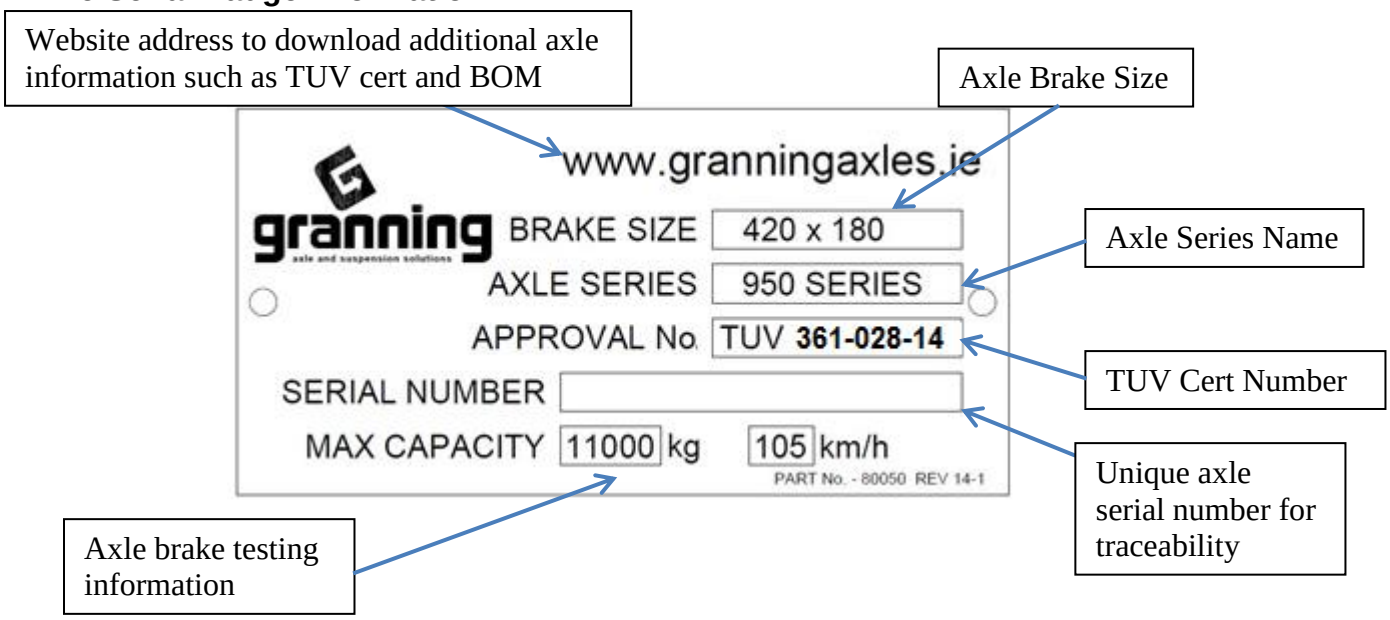

Read this section before welding the axle saddles

Beam Stresses

Granning Axle beams are manufactured from high tensile, hot rolled hollow tube & square hollow beam. In service these beams are subjected to combined bending and torsional stresses. Maximum combined stresses occur along the top and lower surface of the beam. The minimum stresses occur along the front and rear centre line, called the neutral axis. It is an accepted fact that welding steel causes a heat effected zone which embrittles the metal in that area. Therefore, any welding on the axle beam must always be away from the high stress lines and near to the neutral axis.

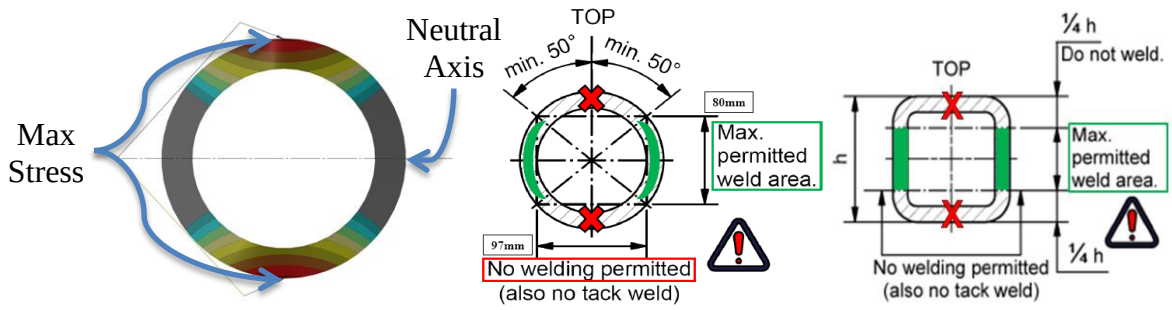

Ireland
T. +353 (0) 45 897 553
F. +353 (0) 45 848 638
UK
T. +44 (0) 1925 817 689
F. +44 (0) 1925 817 153
NI
T. +44 (0) 2890 740 055
F. +44 (0) 2890 752 718
Poland
T. +48 (0) 29 753 1616
F. +48 (0) 29 753 1604

Effects of Beam Welding

When a weld is made on the beam, it creates in effect an area of extreme localised heat treatment. The heat generated by the welding process will cause the beam material, within the immediate vicinity of the weld, to become hardened. This results in a small area of brittleness replacing the required property of ductility. It can be seen that should an area of localised hardening appear at either point of maximum stress, the strength of the beam could seriously be affected. Therefore any welding must be in the neutral zone, ie not in top or lower 100 degrees.

Welding precautions

- Connect the earth directly to the work piece. Not to suspension spring.
- NEVER weld on the upper or lower surfaces of the axle.
- Confine welds to axle surfaces not exceeding 40° above or below the horizontal.
- Remove oil and paint from areas to be welded.
- As much as possible, try to avoid overheating the axle.
- Protect the spring Beam / Leaf and rubber components from weld splatter.
- Welds must contain NO voids, craters, inclusions or cracks.
- When ambient conditions are below 20°C, preheat the weld areas.

Locating axle seat/saddle before welding

Ensure axle beam sits correctly in the seat/saddle. A gap between the axle seat and beam can cause excessive weld stress and crack the axle beam.

Saddle / Seat welding

- Set saddle centres to the given dimension.
- Ensure that the axle tube and saddle cup are clean.
- Centre axle between the saddles.
- Locate camshaft/brake position ensuring correct rotation and position.
- Set saddle spring surfaces parallel to one another.
- Once all of the above has been assured and re-checked, weld saddles as below.

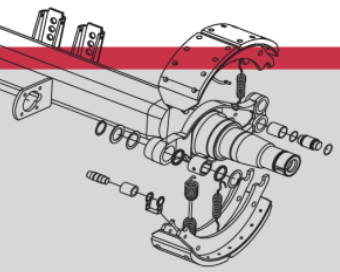

Ireland
T. +353 (0) 45 897 553
F. +353 (0) 45 848 638

UK
T. +44 (0) 1925 817 689
F. +44 (0) 1925 817 153

NI
T. +44 (0) 2890 740 055
F. +44 (0) 2890 752 718

Poland
T. +48 (0) 29 753 1616
F. +48 (0) 29 753 1604

Although it is possible to make a 10 mm fillet weld in one pass, we recommend that this be done in **three passes**. The order of which are shown in the close up below. Make second and third runs before previous welds are cool, de-scaling first.
The weld is to be in direction towards the axle centre, it is to start on outer side and be completed on inboard side of saddle.

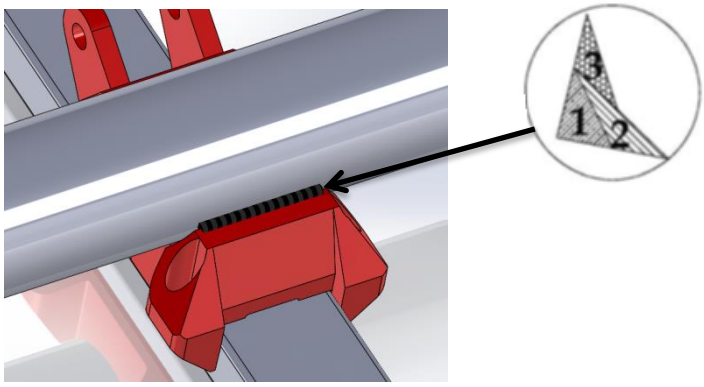

Brake camshaft rotation

To assure safe operation and maximum durability on parts such as brake linings and tyres, it is necessary to position and install the axle properly. It is essential that the axle assembly be installed so that the cams rotate in the same direction as the wheels in FORWARD travel.

Installation in which the camshaft rotation is opposite to that of the wheel rotation could cause noisy brakes, chatter and wheel 'hop'. With this in mind, the axle should be ordered with placement of air chamber and slack adjuster assemblies that will ensure the correct directional rotation of the cams when the axle is installed.
See below.

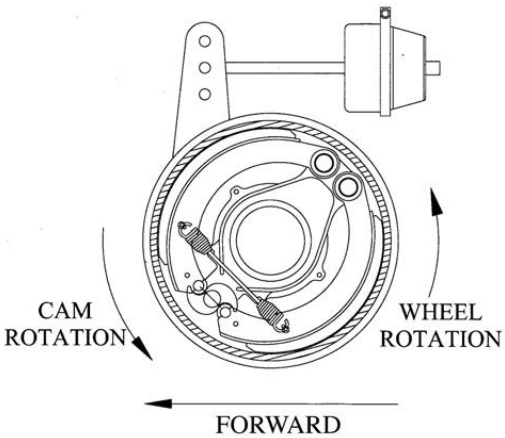

Ireland
T. +353 (0) 45 897 553
F. +353 (0) 45 848 638

UK
T. +44 (0) 1925 817 689
F. +44 (0) 1925 817 153

NI
T. +44 (0) 2890 740 055
F. +44 (0) 2890 752 718

Poland
T. +48 (0) 29 753 1616
F. +48 (0) 29 753 1604

Axle Tracking

All Granning axles are constructed so that the toe in / out is less than 2 mm / metre. Responsibility for proper axle alignment lies with the axle installer. The Granning Axle Range includes Trailer axles and Truck axles.

Trailer axles are aligned (tracked) from the trailer king pin to fixed points on the front axle. Following axles are tracked from the front axle.

Truck Axles should be aligned parallel to the DRIVE axle.

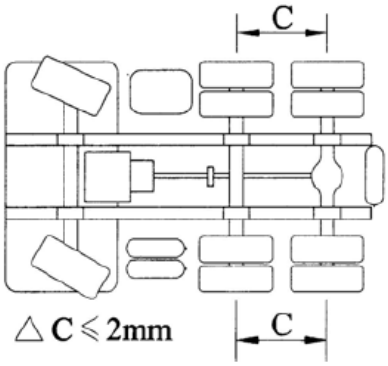

Tracking of truck axles

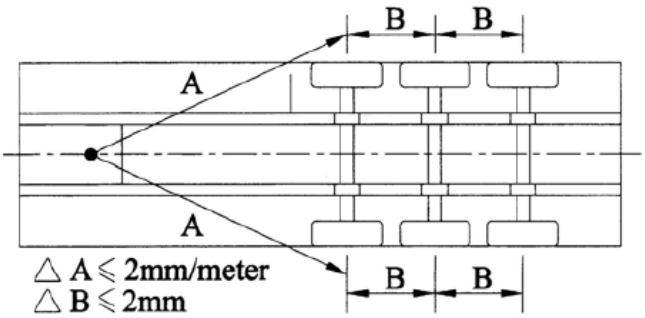

Tracking of trailer axles

Ireland
T. +353 (0) 45 897 553
F. +353 (0) 45 848 638

UK
T. +44 (0) 1925 817 689
F. +44 (0) 1925 817 153

NI
T. +44 (0) 2890 740 055
F. +44 (0) 2890 752 718

Poland
T. +48 (0) 29 753 1616
F. +48 (0) 29 753 1604

Wheel fasteners

It is vital that operators and manufacturers ensure that the correct type of wheel cones and nuts are fitted to specified bolts, before torquing to full setting.
The below diagrams show the six main nut and bolt configurations.
Wheel Rims and Fasteners of different standards must not be interchanged or mixed in any combination.

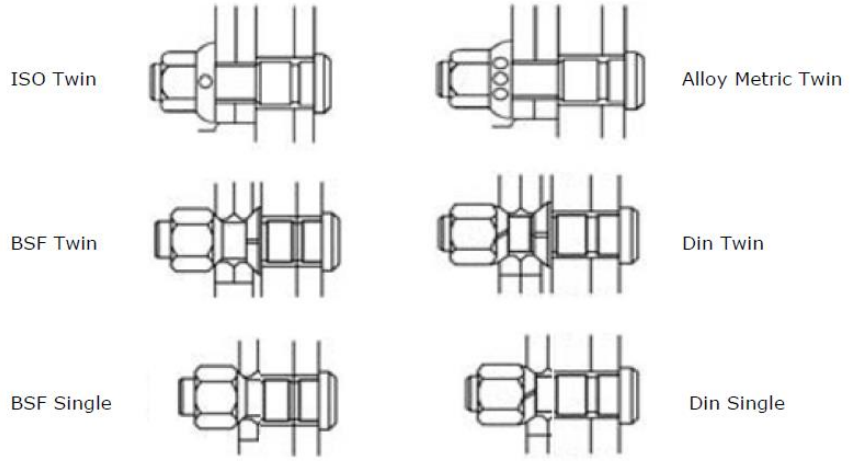

Mating surfaces between Hubs and Wheel Rims should be primer painted only. Thick gloss will result in loss of torque.

	Ft.Lb	N.m
Wheel nuts - BSF / DIN	400 - 450	550 - 600
Wheel nuts - ISO	442 - 465	600 - 630
Wheel nuts - Alloy	442 - 465	600 - 630

To achieve correct tension in each of the wheel locating bolts, and thus optimum wheel security, Tighten wheel nuts in the order shown below.

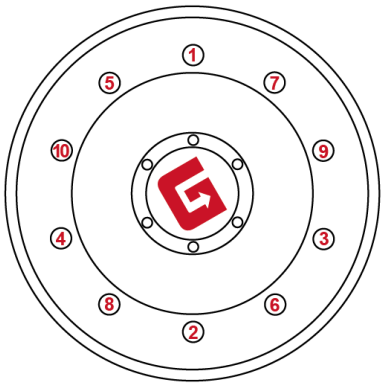

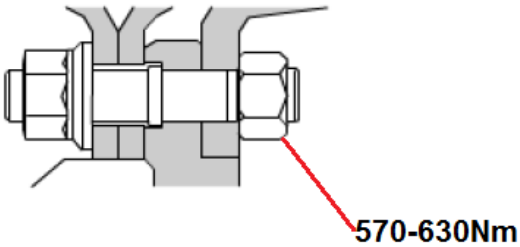

Above is the torque for the internal nut used on some axle models

Ireland
T. +353 (0) 45 897 553
F. +353 (0) 45 848 638

UK
T. +44 (0) 1925 817 689
F. +44 (0) 1925 817 153

NI
T. +44 (0) 2890 740 055
F. +44 (0) 2890 752 718

Poland
T. +48 (0) 29 753 1616
F. +48 (0) 29 753 1604

Axle servicing

In order to achieve maximum performance from your Granning axle it requires regular servicing outlined below.

Service intervals depend on operating conditions and are best decided by the Operators Fleet Engineer, having considered the following guide lines for axles used for general road haulage. It's recommended that records of this servicing are kept for future reference.

Note: local legislative regulations should always be followed.

On Initial Receipt >

Check all nuts, etc. for recommended torque. It is strongly recommended that wheel nut torque is checked every 7 days or 1000 km, whichever is the sooner.

First 300 miles (500 km) >

Check all wheel nuts daily for first week, due to seating effects. It is suggested that the hubs are checked for end-float, again due to seating effects. Lubricate all grease points, using Lithium soap-based EP2 grease.

At 3,000 miles (5,000 km) >

Check same as first 300 miles (500 km). Check wear pattern of brake linings, if not satisfactory, make correct adjustment. Check hubs for end-float. Reset adjustment nut if necessary.

At 10,000 miles (15,000 km) and every **10,000 miles** thereafter >

Lubricate all grease points. Check hubs for bearing end-float. Adjust as necessary. Lubricate slack adjusters. Check brake linings for wear.

At 30,000 miles (50,000 km) and every **30,000 miles** thereafter >

Remove hubs, check brake linings for wear, check anchor pins for sticking (remove and re-grease if necessary), check camshafts for sticking. Completely clean out grease from hub. Re-pack, using fresh grease. Check grease seals for signs of wear, replace if necessary. Re-set bearing adjustment nuts to give bearing end-float.

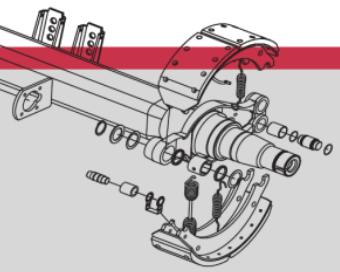

Ireland
T. +353 (0) 45 897 553
F. +353 (0) 45 848 638

UK
T. +44 (0) 1925 817 689
F. +44 (0) 1925 817 153

NI
T. +44 (0) 2890 740 055
F. +44 (0) 2890 752 718

Poland
T. +48 (0) 29 753 1616
F. +48 (0) 29 753 1604

Bearings

The bearings used in Granning axles are of the finest materials, and produced to exacting standards. They are selected to give the user considerable service life. To protect this longevity, the following procedure is recommended when servicing is required:

a) Immerse cups and cones in a suitable cleaning solution. After soaking, agitate bearings around in fluid to flush out any old residue grease. Never spin a bearing, this could cause the rollers to skid, thus damaging the highly finished internal surfaces of the bearing.

b) When clean, thoroughly drain and dry, preferably in warm air at around 65 - 80°C.

c) The bearing must be now checked for any signs of corrosion, discolouring, pitting or flaking. Should there be any doubts as to the condition of the bearing, replacement is strongly advised.

d) If the bearing is to be refitted immediately, ensure the rollers are fully prepacked with lubricant (see recommended lubricants) before fitment. Alternatively, immerse the bearing in rust-preventative oil, wrap in wax paper, and box for storage.

Recommended lubricants

Manufacturer	Recommended	Alternative
Shell	Shell Gadus S3 V220C 2	Shell Retinax 'LX2'
Mobile	Mobile Grease H.P. 222	Mobile Grease H.P.
Castrol	Castrol LMX	Spheerol A.P.T.Z.
Texaco	Hytex EP2	
Esso	Unirex EP2	
BP	Energrease LC2	

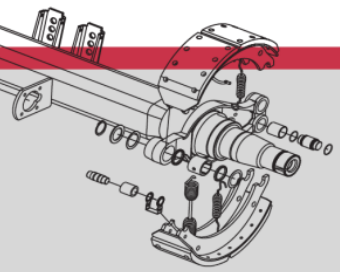

Ireland
T. +353 (0) 45 897 553
F. +353 (0) 45 848 638

UK
T. +44 (0) 1925 817 689
F. +44 (0) 1925 817 153

NI
T. +44 (0) 2890 740 055
F. +44 (0) 2890 752 718

Poland
T. +48 (0) 29 753 1616
F. +48 (0) 29 753 1604

External Drum

Bearing setting and lubrication

Apply grease to these areas. <u>It is important not to overfill the hub with grease!</u>

Hub: 400 grams

Hub Cap: Small amount

Care: Greasing at high pressure may cause damage to the seals

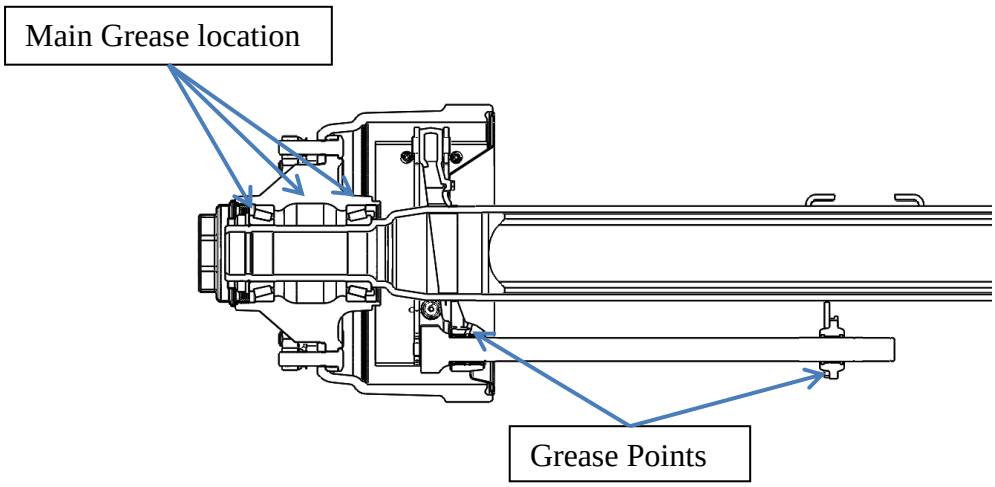

Changing Drum

Tools needed

Socket for M22 wheel nut, 32mm Across Flats

Removal of Brake Shoes from 950 (External drum) Series axles does not require the removal of the Hub, as the drum can be pulled over this assembly without disturbing it. This allows quick access to the brakes.

Be careful when removing wheel assembly as the drum may come off with the wheel and then fall when clear of hub and wheel.

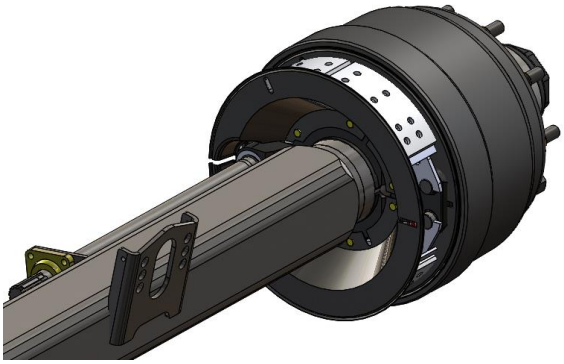

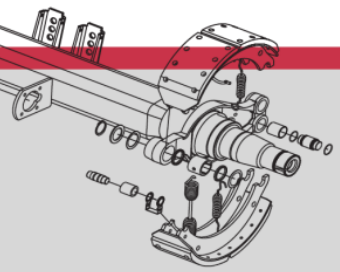

Ireland
T. +353 (0) 45 897 553
F. +353 (0) 45 848 638

UK
T. +44 (0) 1925 817 689
F. +44 (0) 1925 817 153

NI
T. +44 (0) 2890 740 055
F. +44 (0) 2890 752 718

Poland
T. +48 (0) 29 753 1616
F. +48 (0) 29 753 1604

Internal Drum

Changing Drum

Tools needed

Socket for M22 wheel nut, 32mm Across Flats

For internal drum axles the hub and drum has to be removed in one go. Caution must be used when removing this assembly due to its weight and potential to suddenly slide off the axle spindle.

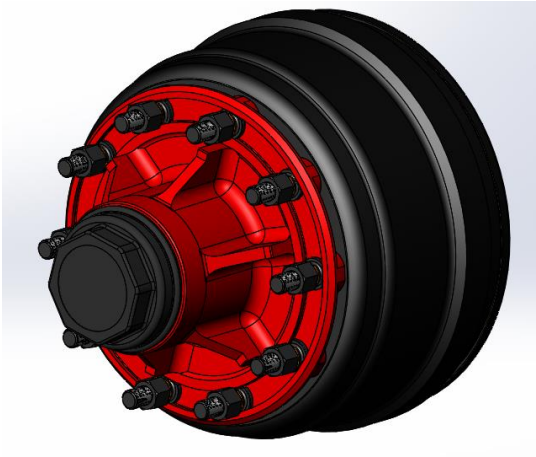

To separate the hub and drum all the internal wheel bolt nuts must be removed. The wheel wheel bolts will then slide out and the hub and drum will separate.

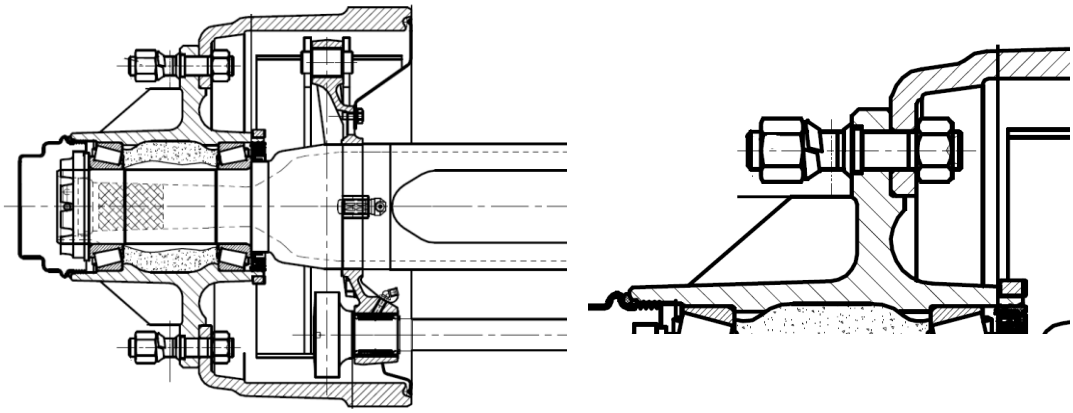

Ireland
T. +353 (0) 45 897 553
F. +353 (0) 45 848 638

UK
T. +44 (0) 1925 817 689
F. +44 (0) 1925 817 153

NI
T. +44 (0) 2890 740 055
F. +44 (0) 2890 752 718

Poland
T. +48 (0) 29 753 1616
F. +48 (0) 29 753 1604

Dust cover removal

Tools needed

Socket for M8 bolts, 13mm Across the Flats

The dust cover is easily removed by unscrewing the 6 x M8 bolts.

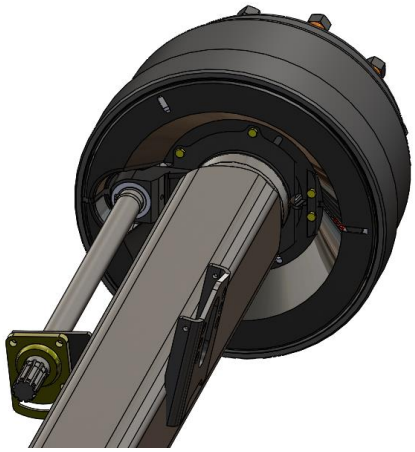

Changing Hub

Tools needed

Socket for hubcap, 123mm Across the Flats 8 sided

Socket for castle nut, 122mm Across the Flats 8 sided

Undo the Hub cap

Straighten cotter pin tab's & remove it

Ireland
T. +353 (0) 45 897 553
F. +353 (0) 45 848 638

UK
T. +44 (0) 1925 817 689
F. +44 (0) 1925 817 153

NI
T. +44 (0) 2890 740 055
F. +44 (0) 2890 752 718

Poland
T. +48 (0) 29 753 1616
F. +48 (0) 29 753 1604

Then remove the castle nut and the thrust washer.

When removing the Hub take care that the outer bearing does not drop out. Any dirt or damage to the bearings and grease can compromise the bearing life so ensure any grease is not exposed to dirt and parts are protected.

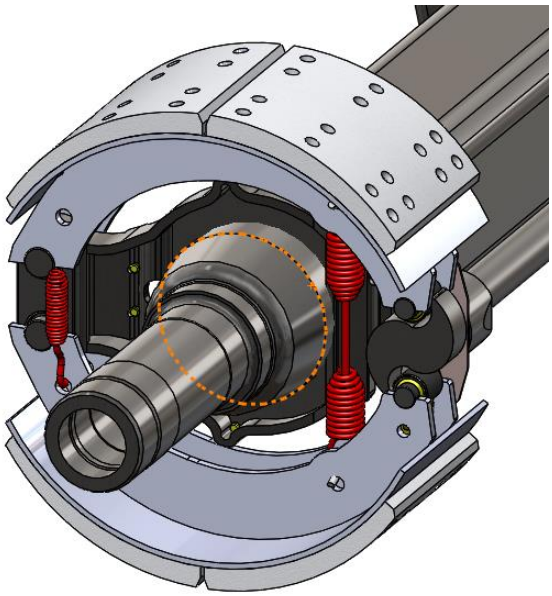

Take care with the removal of hub as this will change the balance of the axle. It is advisable to use a hub puller if one is available.

Ireland
T. +353 (0) 45 897 553
F. +353 (0) 45 848 638

UK
T. +44 (0) 1925 817 689
F. +44 (0) 1925 817 153

NI
T. +44 (0) 2890 740 055
F. +44 (0) 2890 752 718

Poland
T. +48 (0) 29 753 1616
F. +48 (0) 29 753 1604

End float procedure when hub is fitted

The 950 series axles are fitted with two tapered roller bearings. To protect normal bearing life, these bearings must not be subjected to preload during assembly and service.

The correct method of setting end float is as follows:

- Fit the thrust washer
- Fit the axle nut and torque to 350-400Nm while simultaneously rotating the wheel hub assembly. If a normal spanner is used, tighten the spindle castle nut until the wheel bearing race drags slightly.
- Loosen the axle nut by 1/7 to 1/6 turn to the next available split pin hole.
- Insert the split pin and bend to secure.
- Rotate the brake drum 4 times to test the functionality of the brakes.
- Manually rotate the camshaft and simultaneously rotate the drum to check.
- Clean the surface area of the end of the spindle.
- Apply a small amount of grease to spindle end and hub cap.
- Reinstall the hub cap and O ring. Torque to 80-120Nm

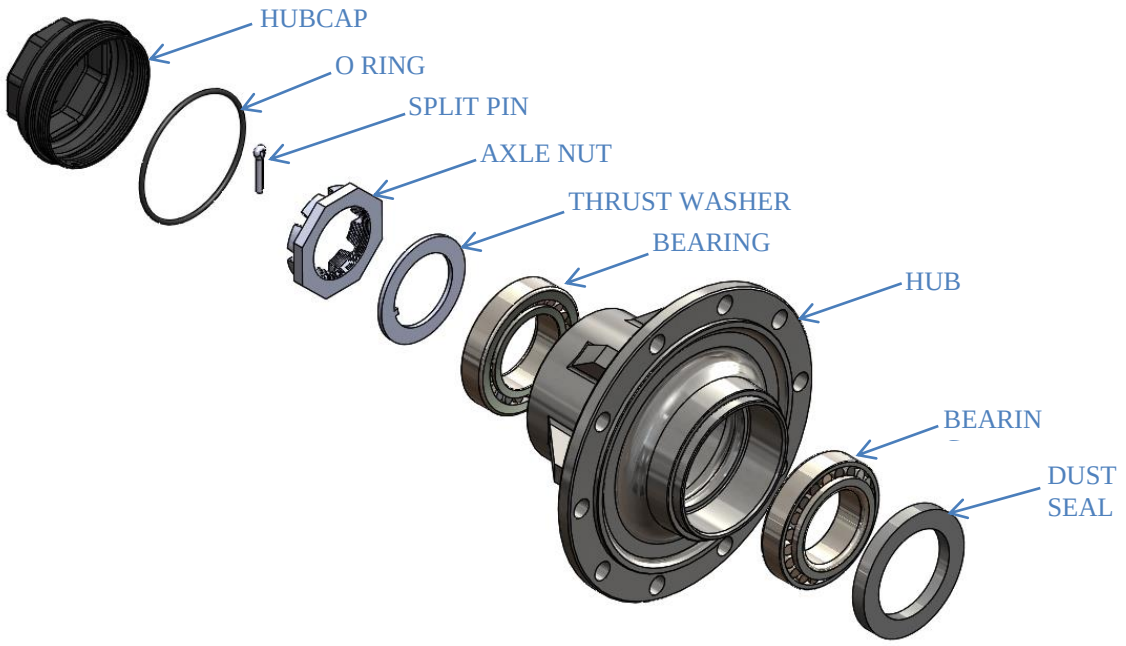

Ireland
T. +353 (0) 45 897 553
F. +353 (0) 45 848 638

UK
T. +44 (0) 1925 817 689
F. +44 (0) 1925 817 153

NI
T. +44 (0) 2890 740 055
F. +44 (0) 2890 752 718

Poland
T. +48 (0) 29 753 1616
F. +48 (0) 29 753 1604

Brakes

It is important that operators develop a schedule for periodic cleaning, inspection, adjustment and lubrication of brake components. This will provide the prevention rather than cure of brake problems. Adjustment of brakes should be carried out as frequently as required, in order to maintain the original safety standard. Slack adjuster travel and uniform lining clearance must be maintained.

At regular intervals, brake drums should be removed and linings checked for wear. The linings must not be allowed to wear down beyond the wear line, or to the rivets. After fitting new or re-lined shoes, always fit new return springs. Each time the hubs are removed for brake inspection, check the following parts for wear:

1. All hub components.
2. Grease seals. (It is recommended that new seals are fitted)
3. Bearing cups, cones & rollers.
4. Brake anchor pins and location holes.
5. Cam rollers and retaining pins.
6. Wheel studs and nuts.
7. Check brake drum for cracks, scoring or any form of deterioration.

Prior to re-assembly, the following parts should be coated with 'axle grease' or equivalent product (see Pg. 10):

1. Cam roller location diameters and journals.
2. Anchor pin location holes in brake shoes.
3. Brake Anchor Brackets (spiders) camshaft bores.
4. Cam head/roller contact

Note: BRAKE LININGS SHOULD BE REPLACED AS A COMPLETE AXLE SET!
Once new lining have been fitted, braking performance will be reduced until the new lining have 'bedded in'. This can take up to 1000 km depending on operating conditions. Therefore it is recommended that linings are replaced well before critical brake performance inspections such as MOT tests etc,. Check with manufacturer of your slack adjusters for any adjustment that is required.
Slack adjusters should be installed and serviced in line with their manufacturer's guidelines.

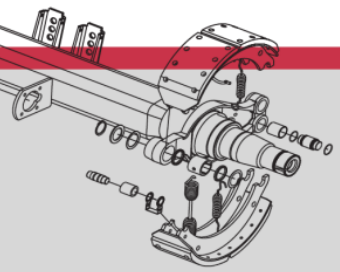

Ireland
T. +353 (0) 45 897 553
F. +353 (0) 45 848 638

UK
T. +44 (0) 1925 817 689
F. +44 (0) 1925 817 153

NI
T. +44 (0) 2890 740 055
F. +44 (0) 2890 752 718

Poland
T. +48 (0) 29 753 1616
F. +48 (0) 29 753 1604

Changing brake shoes

All Granning 950 series axles use Quick-Fit brake shoes, please ensure the correct replacement components are used.

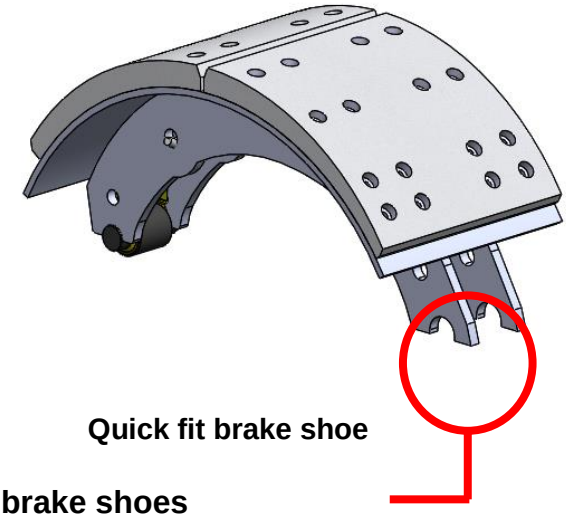

Quick fit brake shoe

Removal of quick fit brake shoes

Removal of Brake Shoes from 950 (External drum) Series axles does not require the removal of the Hub, as the drum can be pulled over this assembly without disturbing it. The below images have the hub and drum removed for clarity.

Be careful when removing wheel assembly as the drum may come off with the wheel and then fall when clear of hub and wheel.

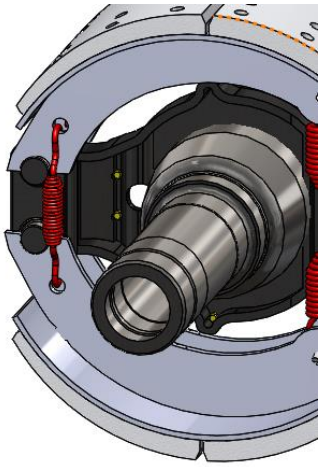

Remove the two brake shoe tensioning springs, taking care not to release them under tension.

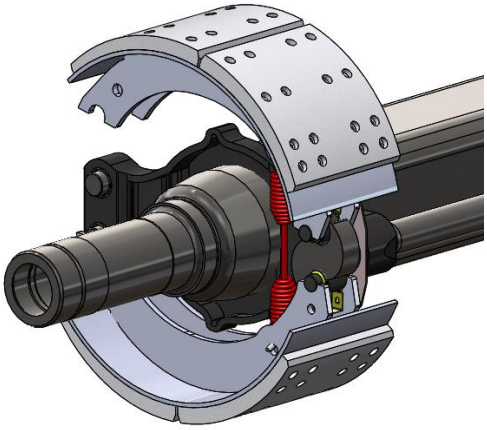

Lift off both brake shoes from the brake anchor pin, and allow them to close around the axle.

Ireland
T. +353 (0) 45 897 553
F. +353 (0) 45 848 638

UK
T. +44 (0) 1925 817 689
F. +44 (0) 1925 817 153

NI
T. +44 (0) 2890 740 055
F. +44 (0) 2890 752 718

Poland
T. +48 (0) 29 753 1616
F. +48 (0) 29 753 1604

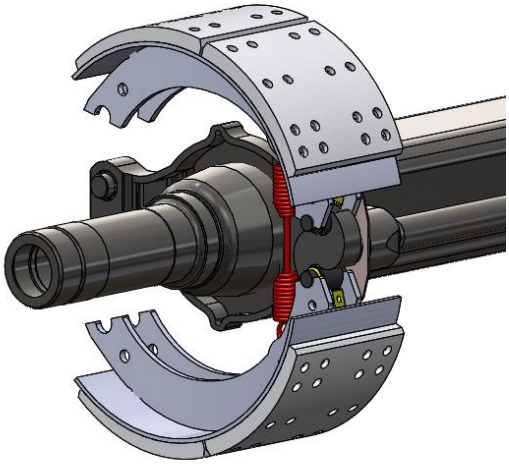

Push the lower shoe down, and pull the shoe outwards.

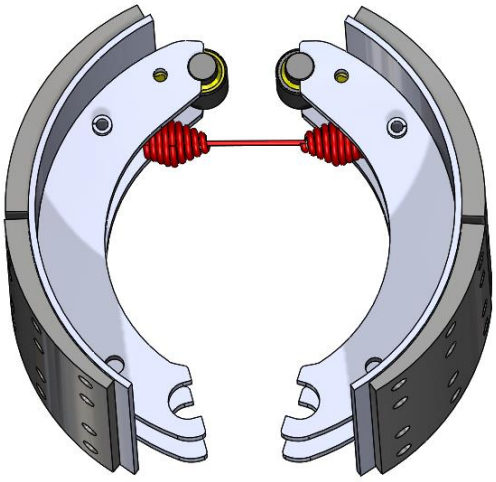

Finally remove the return springs and the anchor bars.

Fitting of a new set of brake shoes is the reversal of the above procedure.

Removal of cam shafts

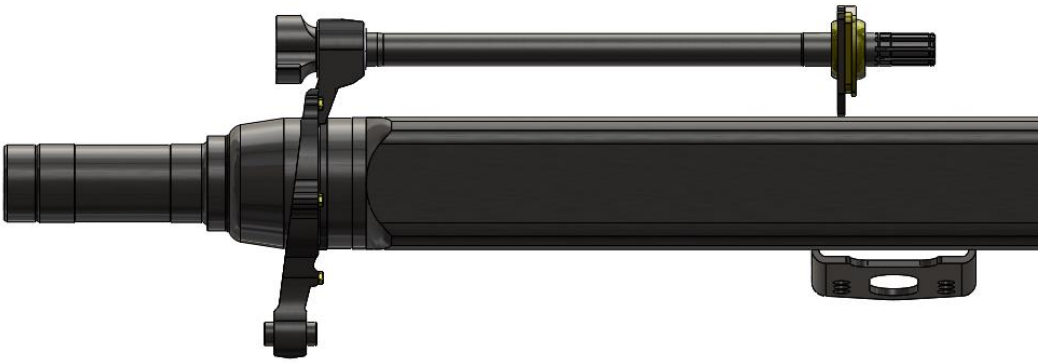

Firstly, if the brake shoes are still fitted, then you can either open them out using the appropriate tool or remove the brake shoes.

Ireland
T. +353 (0) 45 897 553
F. +353 (0) 45 848 638

UK
T. +44 (0) 1925 817 689
F. +44 (0) 1925 817 153

NI
T. +44 (0) 2890 740 055
F. +44 (0) 2890 752 718

Poland
T. +48 (0) 29 753 1616
F. +48 (0) 29 753 1604

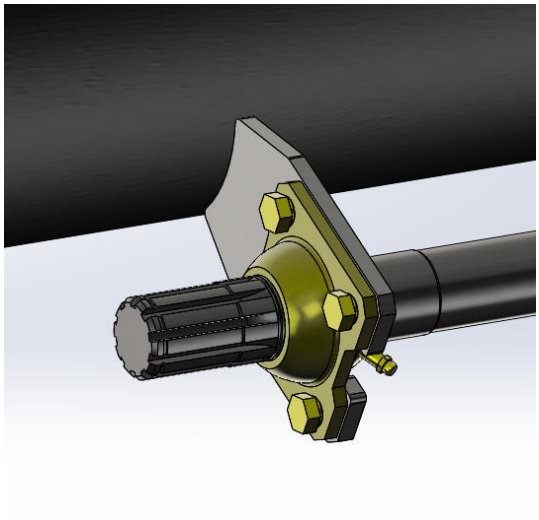

Remove the slack adjuster, washer and circlip from the splined end of the camshaft

Remove the circlip and washer from the anchor bracket end of the camshaft. Circlip shown in red above

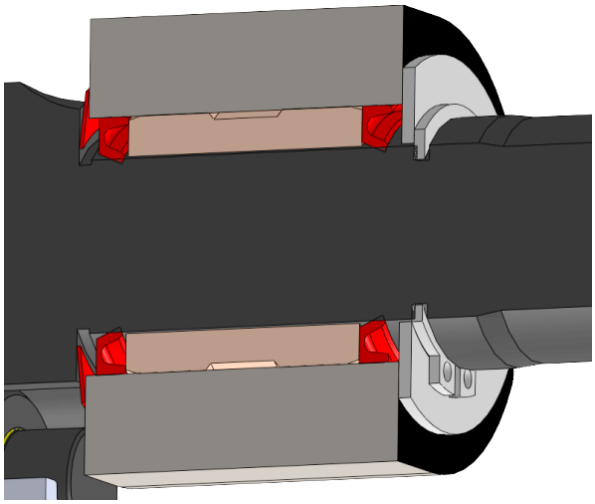

If fitting new anchor bracket seals make sure the direction of the seals are correct

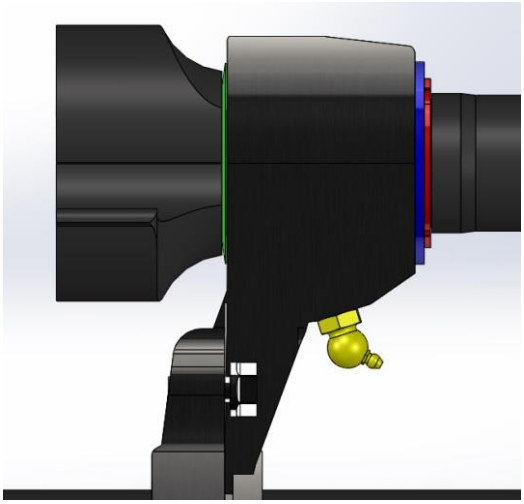

The parts sequence at the anchor bracket is Camshaft head, steel washer 20039, camshaft support washer 20042, camshaft circlip 20043

Ireland
T. +353 (0) 45 897 553
F. +353 (0) 45 848 638

UK
T. +44 (0) 1925 817 689
F. +44 (0) 1925 817 153

NI
T. +44 (0) 2890 740 055
F. +44 (0) 2890 752 718

Poland
T. +48 (0) 29 753 1616
F. +48 (0) 29 753 1604

Grease seal removal

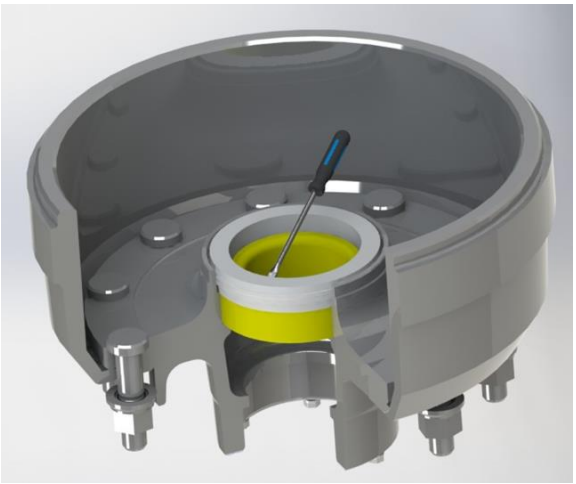

It is acceptable to remove the grease seal with a screwdriver as long as great care is taken to avoid damaging the bearing and journal beneath it.

Once a grease seal has been removed, **NEVER** refit it as the seal will have been broken and will only be the cause of further problems.

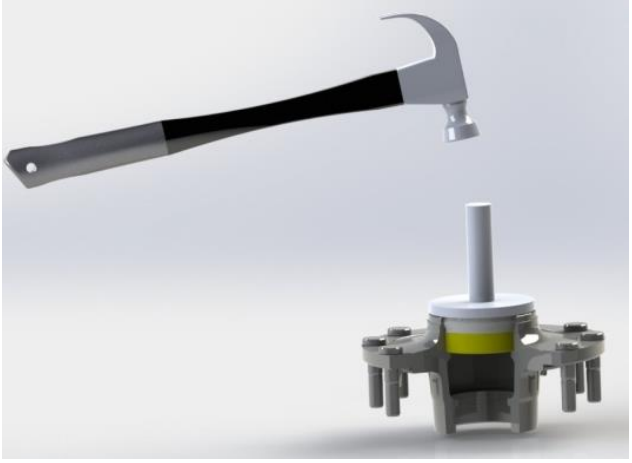

When fitting a grease seal always take care as not to damage the seal on fitment. Granning advise the use of a grease seal driver, as this will help to correctly fit the grease seal.

Ireland
T. +353 (0) 45 897 553
F. +353 (0) 45 848 638

UK
T. +44 (0) 1925 817 689
F. +44 (0) 1925 817 153

NI
T. +44 (0) 2890 740 055
F. +44 (0) 2890 752 718

Poland
T. +48 (0) 29 753 1616
F. +48 (0) 29 753 1604

Bearing removal

Outer bearing cone being removed.

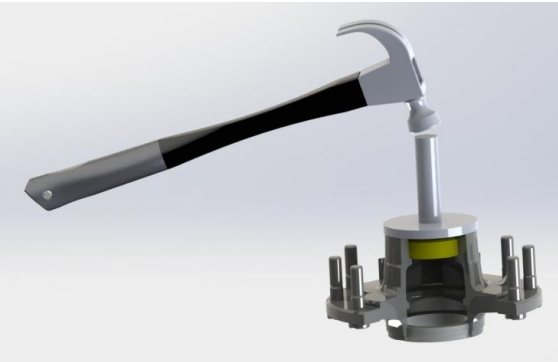

Outer bearing cone being fitted

Removal of bearings

It is far more difficult to remove bearings from a shaft than to put them on. It is necessary to remove the bearings by using the correct tools, otherwise damage may be sustained to the balls/rollers or races. Since such damage is seldom visible, it does not become known until after complete reassembly. It is good preventative maintenance to replace most bearings during the overhaul period. If a bearing is not going to be replaced, avoid removal during low mileage rebuild.

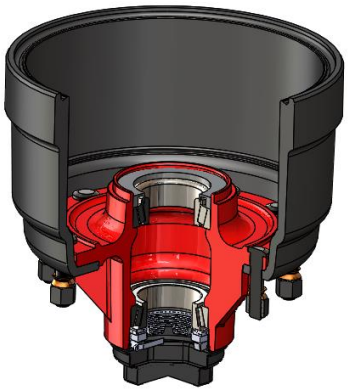

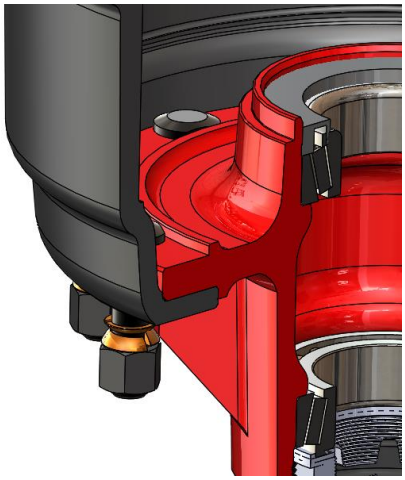

Before fitment remember to check that the bearing is fully pre-packed with grease. When fitting bearings it is essential to use proper tools that have been designed for the task. Using these tools will help to prevent damage to the bearing. Damaging a bearing on fitment could cause increased wear and premature failure. Ensure bearing cone and seal are fully seated in hub before reassembly.

Ireland
T. +353 (0) 45 897 553
F. +353 (0) 45 848 638

UK
T. +44 (0) 1925 817 689
F. +44 (0) 1925 817 153

NI
T. +44 (0) 2890 740 055
F. +44 (0) 2890 752 718

Poland
T. +48 (0) 29 753 1616
F. +48 (0) 29 753 1604

ABS

If the ABS pole wheel is being replaced or fitted, it is important that it is fully seated on the hub and it is perfectly parallel to the hub face otherwise it will create an ABS fault reading. If replacing or changing the ABS sensor ensure it is properly coated with the supplied anti fretting paste.
Anytime an ABS axle is serviced the axle should be tested with an ABS testing device when reassembled.

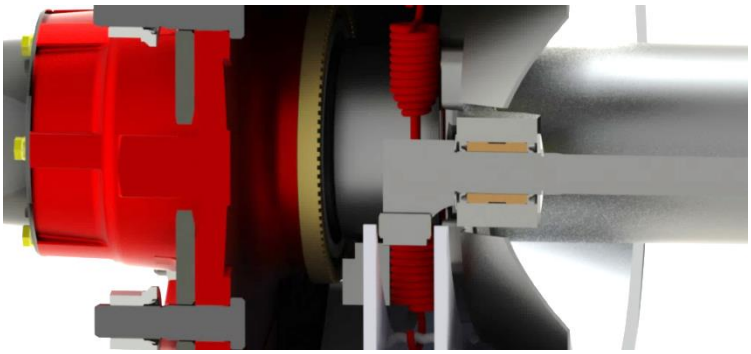

Trouble shooting

Important Procedure

When locating and correcting axle troubles, a systematic procedure should be followed.

Check Functioning Prior to Disassembly:

Many times the answer to the trouble is apparent when the unit is inspected prior to disassembly, but this evidence is often lost when parts are separated. If possible, check the unit prior to disassembly. Bear in mind that a careful inspection of the unit should be made as each disassembly step is performed.

Inspect Thoroughly During Disassembly:

It is important to examine all the parts when disassembling an axle to check for wear and damage. After the axle is disassembled, check the lubricant for foreign particles which often reveal sources of troubles that are overlooked during the disassembly.

Ireland
T. +353 (0) 45 897 553
F. +353 (0) 45 848 638

UK
T. +44 (0) 1925 817 689
F. +44 (0) 1925 817 153

NI
T. +44 (0) 2890 740 055
F. +44 (0) 2890 752 718

Poland
T. +48 (0) 29 753 1616
F. +48 (0) 29 753 1604

Repair or Replace Defective Parts:

All pieces should be accurately examined because the broken parts are often just the result and not the cause of the trouble. All parts that are broken or worn and no longer meet specifications should be replaced with genuine NEW components.

Excessive Brake Drum Wear:

Possible Causes:

a) Overheating through excessive braking
b) Contaminated Brake linings

Grease or Oil Leaks:

Possible Causes:

a) Incorrect assembly or damaged seal
b) Seal lips distorted
c) Damaged / worn hub cap O ring
d) Hubometer stem leaks

Loose Wheels:

Possible Causes:

a) Incorrect torque
b) Worn Cones / bolts
c) Mismatched wheels and fasteners
d) Damaged rims
e) Excessive paint on hub

Hubs Overheating:

Possible Causes:

a) Bearing adjustment too tight
b) Insufficient lubrication

Brakes Binding or Dragging:

Possible Causes:

a) Failed brake shoe return spring
b) Badly worn bearings
c) Incorrectly adjusted brakes
d) Brakes not releasing properly

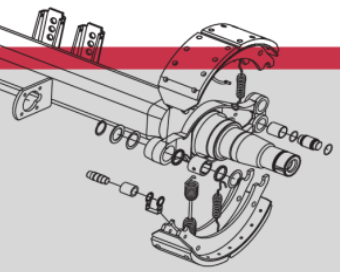

Ireland
T. +353 (0) 45 897 553
F. +353 (0) 45 848 638

UK
T. +44 (0) 1925 817 689
F. +44 (0) 1925 817 153

NI
T. +44 (0) 2890 740 055
F. +44 (0) 2890 752 718

Poland
T. +48 (0) 29 753 1616
F. +48 (0) 29 753 1604

e) Faulty valve in brake system
f) Faulty trailer air coupling

Bearing Failure:

Possible Causes:

a) Abrasive contamination
b) Overheating due to lack of end float
c) Forcible assembly
d) Incorrect end float
e) Damaged dust cover

Bearing Failures:

More than 90% of all bearing failures are caused by dirt, which is always abrasive. Dirt may enter the bearings during assembly of the unit, or be carried into the bearing by the lubricant while in service. Dirt may enter through seals, or even dirty containers used for the addition or change of lubricant.

Softer material such as dirt, dust etc., usually form abrasive paste or lapping compounds within the bearings themselves since the unit pressure between the balls/rollers and raceways makes a perfect pulveriser. The rolling motion tends to entrap and hold the abrasives. As the balls/rollers and raceways wear, the bearings become noisy. The lapping action tends to increase rapidly as the fine steel from the balls/rollers and raceway adds to the lapping material.

Hard, coarse material such as chips etc., may enter the bearings during assembly from the hammers, drifts, power chisels etc., or may be manufactured within the unit during service from raking teeth, etc. These chips produce small indentations in balls/rollers and races. Jamming of these hard particles between balls/rollers and races may cause the inner race to turn in the housing.

Corrosion:

Water, acid and corrosive materials formed by deterioration of lubricant, will produce a reddish-brown coating and small etched holes over outer and exposed surfaces of race. Corrosive oxides also act as a lapping agent.

Brinelling is caused by improper assembly or removal, usually hammering with off centre blows. Use tubes, preferably under a press or extractor.

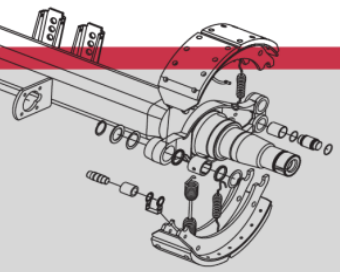

Ireland
T. +353 (0) 45 897 553
F. +353 (0) 45 848 638

UK
T. +44 (0) 1925 817 689
F. +44 (0) 1925 817 153

NI
T. +44 (0) 2890 740 055
F. +44 (0) 2890 752 718

Poland
T. +48 (0) 29 753 1616
F. +48 (0) 29 753 1604

Fatigue:

All bearings are subject to fatigue and must be replaced eventually. Operators experience will dictate mileage replacement of bearings showing only normal wear.

Shaft Fits:

Excessive looseness under load is very objectionable because it produces a creeping or slipping of the inner ring on the rotating shaft. This causes the surface metal of shafts to scrub or wear off.

When play or looseness even 0.0025 mm exists between the bearing and shaft, there is a very powerful force tending to rotate the inner race on the shaft.

Contact Information

For axle and suspension products: **www.granningaxles.ie**

For replacement parts: **www.airsprings.com**

Granning Axles Ltd
Naas Industrial Estate
Naas
Co. Kildare
Ireland

Phone: +353 (0) 45 897 553
Fax: +353 (0) 45 848 638

Granning UK Ltd
36-37 Melford Court
Hardwick Grange
Warrington
Cheshire WA1 4RZ
England

Phone: +44 (0) 1925 817 689
Fax: +44 (0) 1925 817 153

Granning Belfast
201 York Road
Belfast BT3 9BL
Northern Ireland

Phone: +44 (0) 2890 740 055
Fax: +44 (0) 2890 752 718

Granning Polska Sp. z o.o.
Pułtuska 112A
07-200 Wyszków
woj . Mazowieckie
Polska

Phone: +48 (0) 29 753 1616
Fax: +48 (0) 29 753 1604

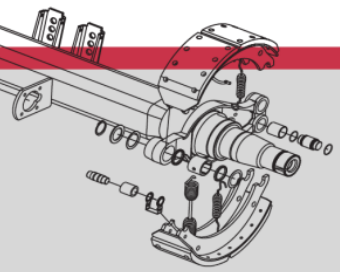

Ireland
T. +353 (0) 45 897 553
F. +353 (0) 45 848 638

UK
T. +44 (0) 1925 817 689
F. +44 (0) 1925 817 153

NI
T. +44 (0) 2890 740 055
F. +44 (0) 2890 752 718

Poland
T. +48 (0) 29 753 1616
F. +48 (0) 29 753 1604

Ireland
T. +353 (0) 45 897 553
F. +353 (0) 45 848 638

UK
T. +44 (0) 1925 817 689
F. +44 (0) 1925 817 153

NI
T. +44 (0) 2890 740 055
F. +44 (0) 2890 752 718

Poland
T. +48 (0) 29 753 1616
F. +48 (0) 29 753 1604